MC ANGLE PLATE

ISO-9001:2008

BIB

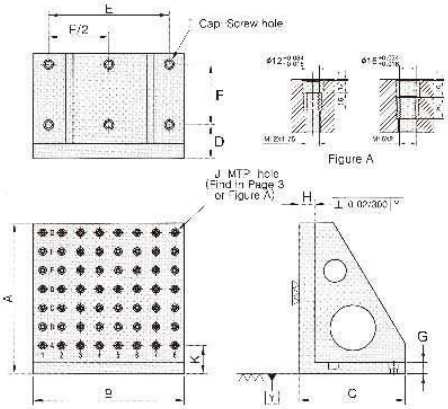

BFB

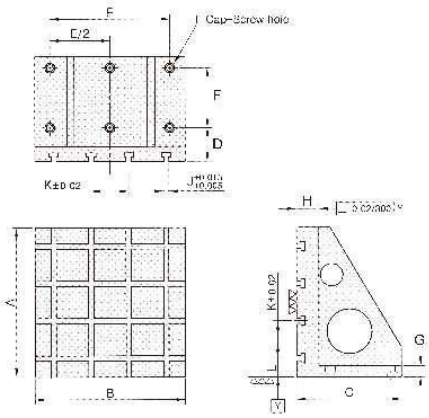

Features:

1. MATERIAL:FC300
2. Heat-treatment-annealing.
3. Suitable for horizontal machine center.

Accept special size ord

MODEL	A	B	C	D	E	F	G	H	I	J		K	L	W.G.
BIB300x300-12	300	300	220	90	250	100	30	40	Ø18	Ø12	M12	75		50
BIB400x400-12	400	400	280	90	320	160	30	40	Ø18	Ø12	M12	75		87
BIB500x500-12	500	500	345	90	400	200	35	50	Ø18	Ø12	M12	75		176
BIB630x630-12	630	630	435	100	500	250	40	50	Ø18	Ø12	M12	40		300
BIB800x800-12	800	800	525	115	640	320	45	50	Ø18	Ø12	M12	75		477
BIB300x300-16	300	300	220	90	250	100	30	40	Ø18	Ø16	M16	75		46
BIB400x400-16	400	400	280	90	320	160	30	40	Ø18	Ø16	M16	75		85
BIB500x500-16	500	500	345	90	400	200	35	50	Ø18	Ø16	M16	75		170
BIB630x630-16	630	630	435	100	500	250	40	50	Ø18	Ø16	M16	40		295
BIB800x800-16	800	800	525	115	640	320	45	50	Ø18	Ø16	M16	75		470
BFB300x300-14	300	300	220	90	250	100	30	60	Ø18	14		100	50	52
BFB400x400-14	400	400	300	90	320	160	30	60	Ø18	14		100	50	101
BFB500x500-14	500	500	350	90	400	200	35	60	Ø18	14		100	50	184
BFB630x630-14	630	630	450	100	500	250	40	65	Ø18	14		125	65	316
BFB800x800-14	800	800	550	115	640	320	45	75	Ø18	14		150	100	566
BFB300x300-18	300	300	220	90	250	100	30	60	Ø18	18		100	50	51
BFB400x400-18	400	400	300	90	320	160	30	60	Ø18	18		100	50	101
BFB500x500-18	500	500	350	90	400	200	35	60	Ø18	18		100	50	175
BFB630x630-18	630	630	450	100	500	250	40	65	Ø18	18		125	65	285
BFB800x800-18	800	800	550	115	640	320	45	75	Ø18	18		150	100	543