HERBERT

豪伯特企業有限公司
HER BERT ENTERPRISE CO., LTD.

TAIWAN EXCELLENCE

ISO 9001 URS REGISTERED FIRM

UKAS QUALITY MANAGEMENT 043

專利產品 請勿仿冒

專利字號 PATENT M529766

零點定位系統
ZERO-POINT-SYSTEMS

HERBERT ISO-9001:2015

零點定位系統組裝模式 ZERO-POINT-SYSTEMS

ZERO-POINT-SYSTEMS

零點定位系統的精華
The Essence of Zero-Point system is.

效率 Efficiency

精度 Precision

快速 Quick

HERBERT ISO-9001:2015

零點定位系統組裝模式 ZERO-POINT-SYSTEMS

- 通過使用最新的品零點定位系統，您可以大大優化生產中工件的夾持和換裝，並縮短機台的交換時間，節約成本！
- Through the latest Zero-Point system, you can not only greatly optimize the production of clamping and changing, but also shorten the time of exchanging machine, or even save costs.

特性：

零點定位系統技術為您帶來明顯的效益：

- 增加機台實際加工時間。
- 縮短工件或夾具的更換時間。
- 重複定位精度高。
- 單一的接觸界面可適用幾乎所有的機台。
- 定位和夾持同步實現。

Features:

The benefits of this system can help you below.

- Increase the working time of the machine
- Shorten the time of exchanging fixture.
- High precision of repeating position.
- The Products suit for almost machines.
- Having both good positioning and clamping.

HERBERT ISO-9001:2015

零點定位系統 ZERO-POINT-SYSTEMS

ZERO-POINT-SYSTEMS

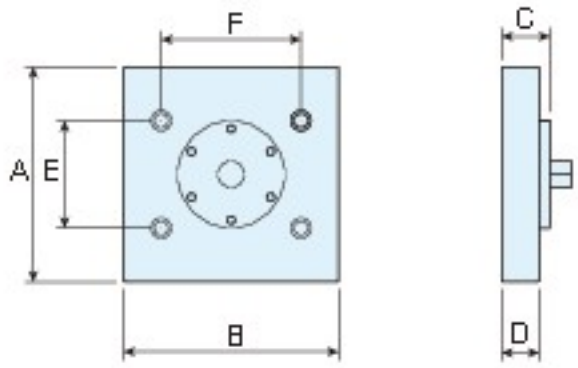

MODEL	A	B	C	D	E	F	夾緊力POWER	拉緊力POWER	N.W.
ZPS-125-200-RH	200	200	50	40	100	100	20KN	55KN	13kg
ZPS-125-200-RL	200	200	50	40	100	100	17KN	55KN	13kg

▶ RH液壓式Hydraulic ▶ RL氣壓式Pneumatic

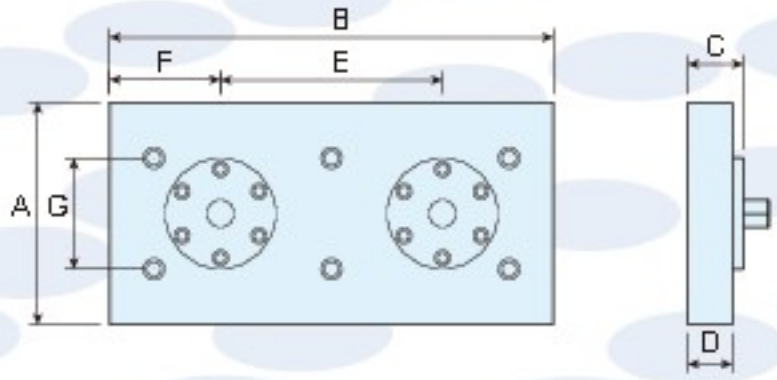

MODEL	A	B	C	D	E	F	G	夾緊力POWER	拉緊力POWER	N.W.
ZPS-225-300-RH	170	300	50	40	150	75	100	20KN	55KN	17kg
ZPS-225-400-RH	200	400	50	40	250	75	100	20KN	55KN	20kg
ZPS-225-300-RL	170	300	50	40	150	75	100	17KN	55KN	17kg
ZPS-225-400-RL	200	400	50	40	250	75	100	17KN	55KN	20kg

▶ RH液壓式Hydraulic ▶ RL氣壓式Pneumatic

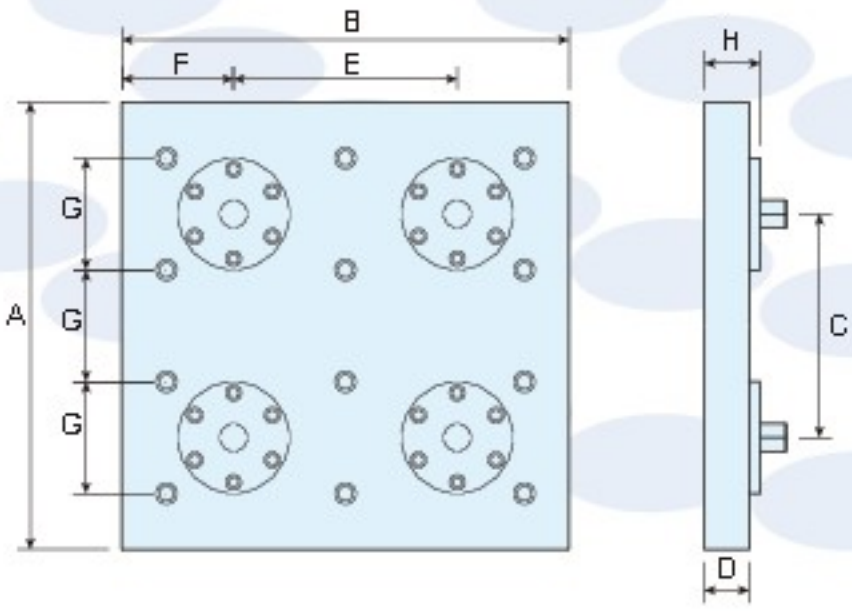

MODEL	A	B	C	D	E	F	G	H	夾緊力POWER	拉緊力POWER	N.W.
ZPS-425-300-RH	300	300	150	40	150	75	100	50	20KN	55KN	29kg
ZPS-425-400-RH	400	400	200	40	250	75	100	50	20KN	55KN	50kg
ZPS-425-300-RL	300	300	150	40	150	75	100	50	17KN	55KN	29kg
ZPS-425-400-RL	400	400	200	40	250	75	100	50	17KN	55KN	50kg

▶ RH液壓式Hydraulic ▶ RL氣壓式Pneumatic

HERBERT ISO-9001:2015

外置安裝式零點定位裝置
EXTERNAL INSTALLATION OF ZERO-POINT SYSTEM

- 外置安裝式零點定位裝置可以安裝在機床工作台、零點定位托架、夾具基準板等處。
- 常在銑削、磨削、腐蝕加工或者射出成形機上被用來快速裝夾工件或者夾具，零點定位裝置可以被安裝在任何位置，甚至是立式或頂式安裝。

- The External installation of Zero-point system can set up on machine table, zero-point bracket, and fixture board.
- It usually uses for fixtures on milling, grinding, corrosion processing or injection molding machine. It can also set up on every single place, even on vertical or top-mounted device.

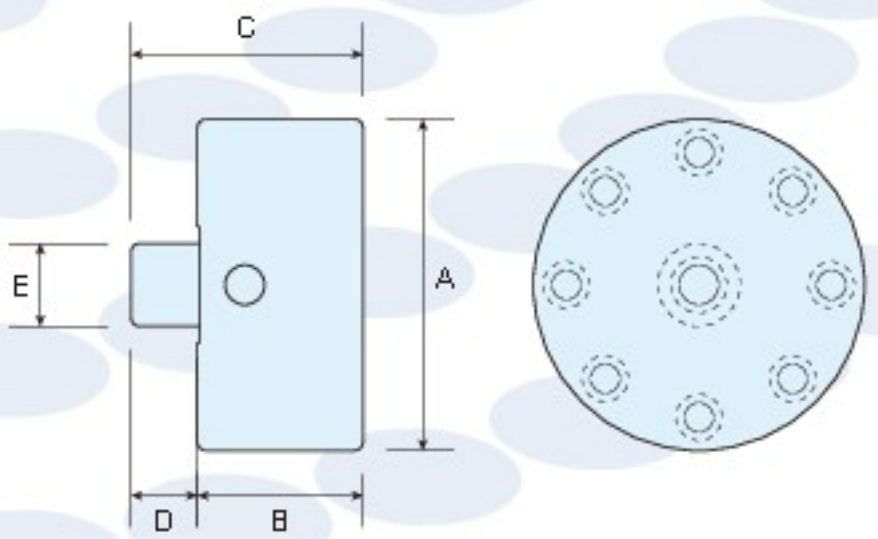

MODEL	A	B	C	D	E	夾緊力POWER	拉緊力POWER	N.W.
ZPS-25RH	100	50	70	20	25	20 KN	55 KN	4.5kg
ZPS-25RL	100	50	70	20	25	17 KN	55 KN	4.5kg

RH液壓式Hydraulic RL氣壓式Pneumatic

HERBERT ISO-9001:2015

零點定位用虎鉗
ZERO-POINT SYSTEM ON VISE

ZERO-POINT-SYSTEMS

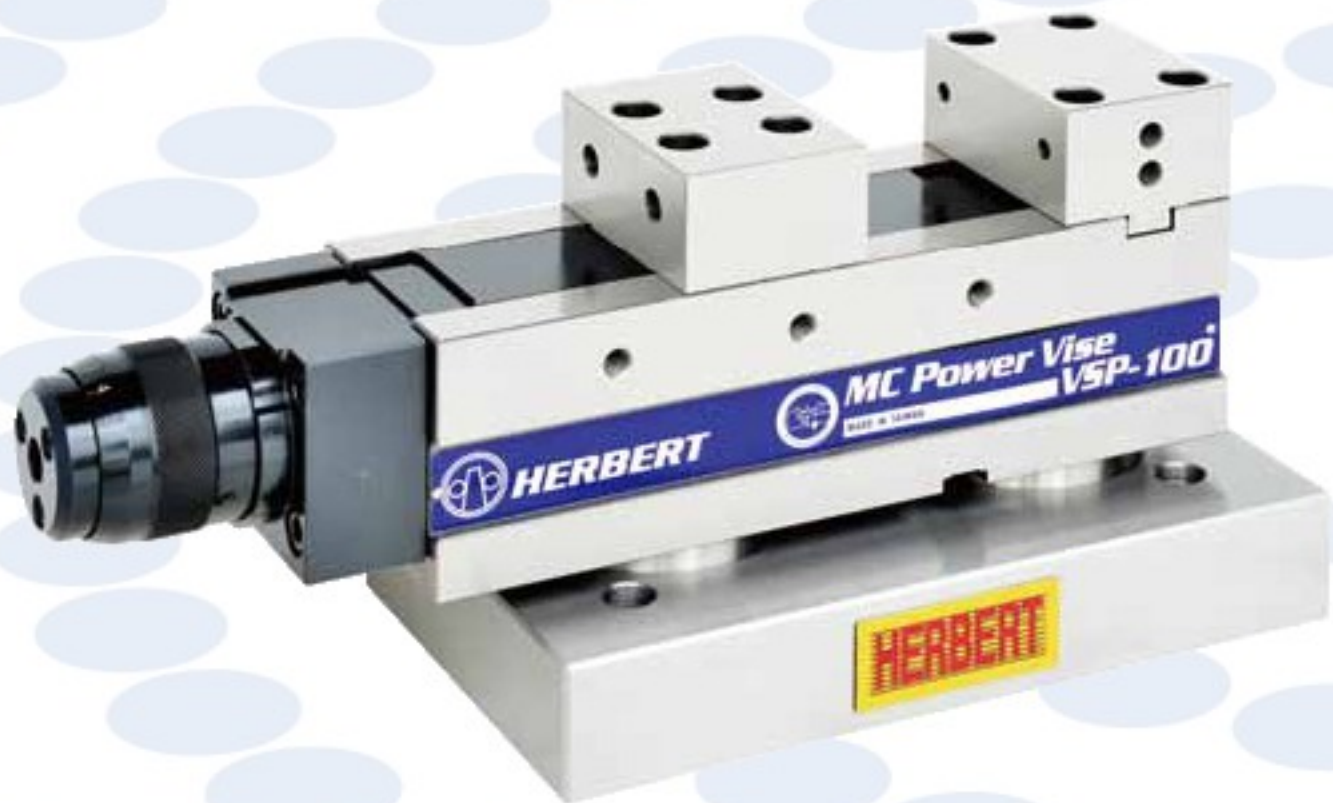

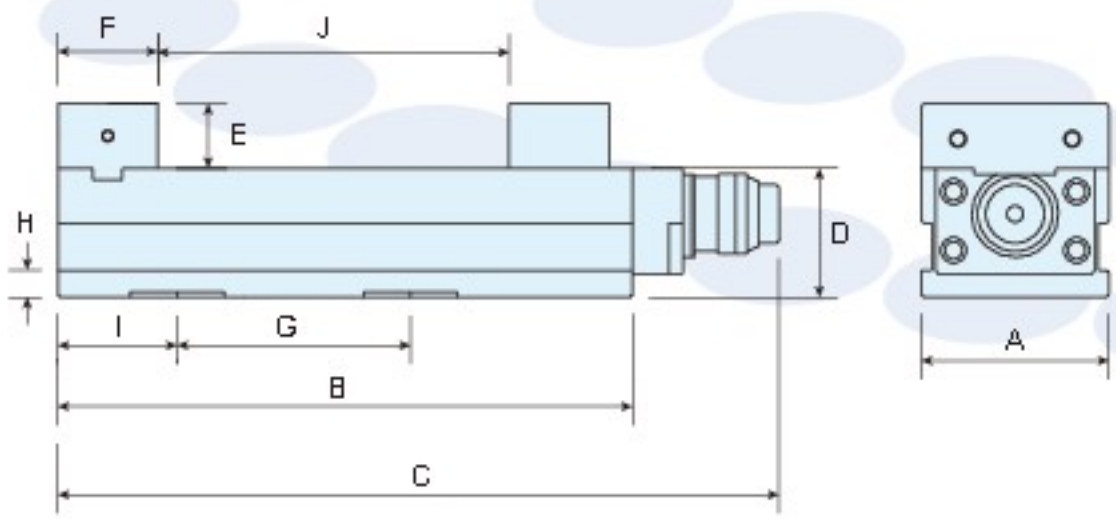

MODEL	A	B	C	D	E	F	G	H	I	J	N.W.
VSP-100-ZPS	100	310	435	95	45	70	150	23	100	140	26kg
VSP-130-ZPS	130	410	535	100	50	80	250	23	110	230	45kg

HERBERT 零點定位用同動求心虎鉗 ISO-9001:2015

ZERO-POINT SYSTEM SELF-CENTRING VISE

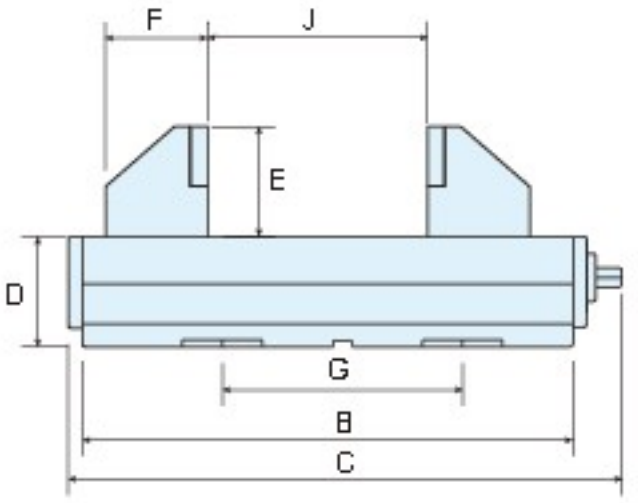

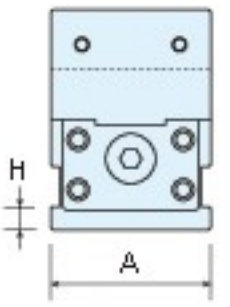

MODEL	A	B	C	D	E	F	G	H	J	N.W.
VSC-100-5XC-ZPS	100	310	340	95	90	85	150	23	30-110	37kg
VSC-130-5XC-ZPS	130	410	510	100	100	90	250	23	30-220	45kg

零點定位用托盤 ZERO-POINT PLATE

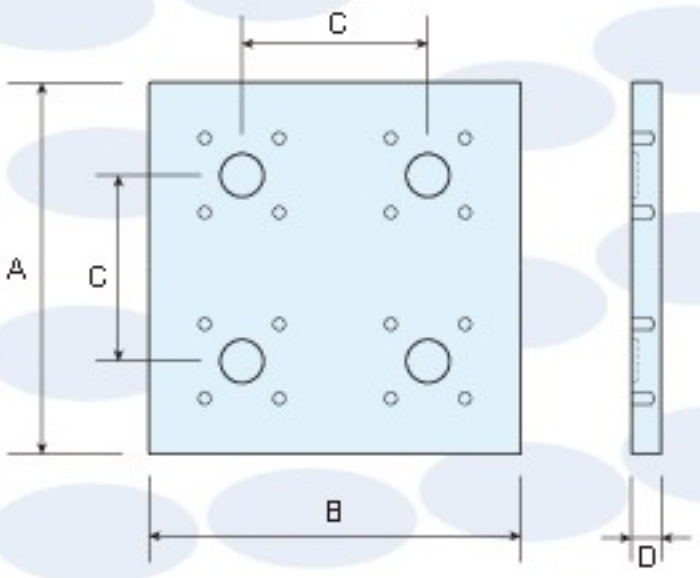

MODEL	A	B	C	D	N.W.
ZPS-425-300-P	300	300	150	30	23kg
ZPS-425-400-P	400	400	250	35	46kg

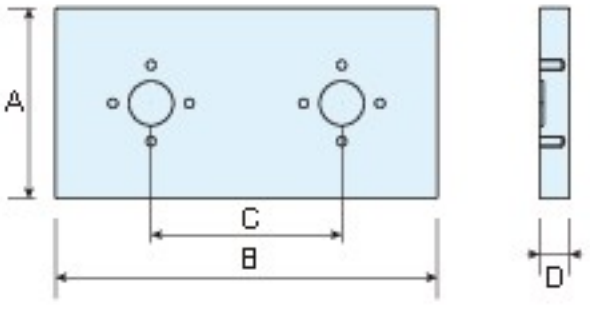

MODEL	A	B	C	D	N.W.
ZPS-225-300-P	170	300	150	30	13kg
ZPS-225-400-P	200	400	250	30	20kg

HERBERT ISO-9001:2015

外置式手動快速定位鎖緊裝置
MANUAL QUICK LOCK

ZERO-POINT-SYSTEMS

發明專利 PATENT NUMBER 1572437

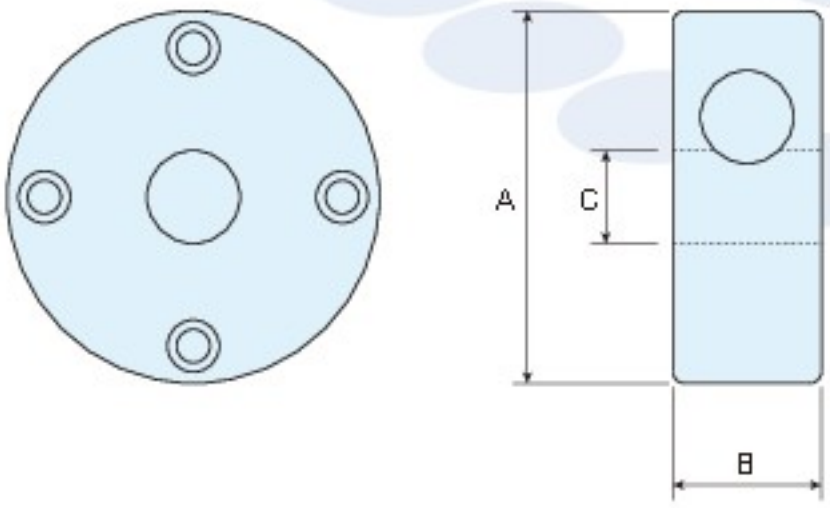

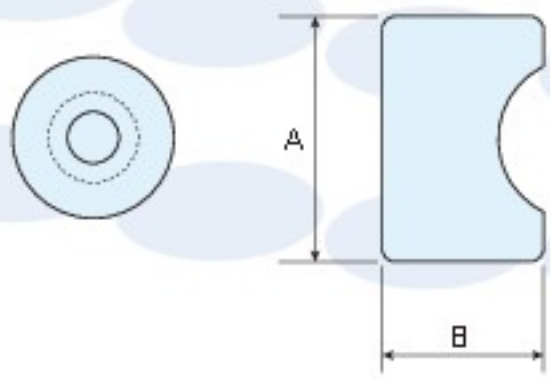

MODEL	A	B	C	N.W.
MQL-100-25A	100	40	25	3kg
MQL-150-35A	148	50	35	8kg

MODEL	A	B	N.W.
MQL-25	40	25	0.2kg
MQL-35	50	35	0.5kg

HERBERT ISO-9001:2015

手動快速定位鎖緊裝置 MANUAL QUICK LOCK

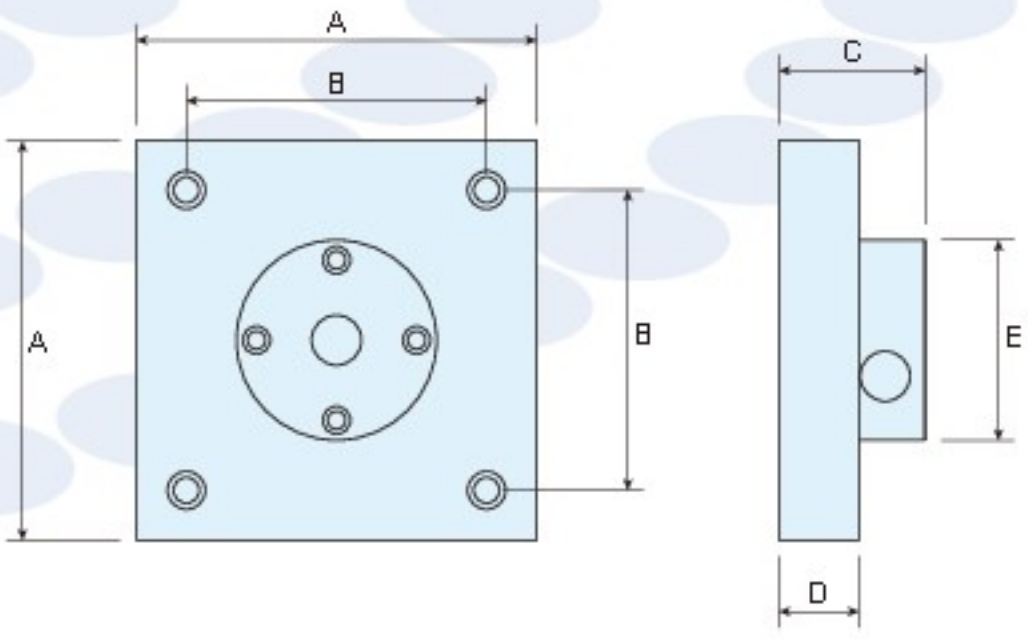

MODEL	A	B	C	D	E	N.W.
MQL-200-25	200	150	68	35	100	12kg
MQL-200-35	200	150	83	35	150	17kg

HERBERT ISO-9001:2015

手動快速定位鎖緊組裝模式 MANUAL QUICK LOCK

ZERO-POINT-SYSTEMS

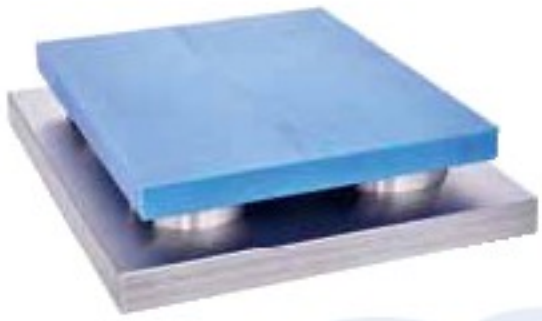

HERBERT ISO-9001:2015

手動快速定位鎖緊裝置 MANUAL QUICK LOCK

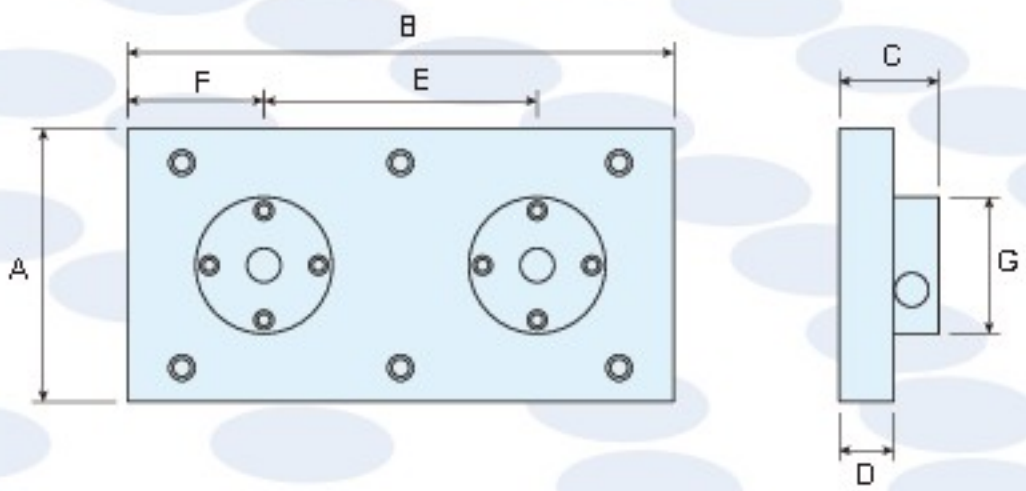

MODEL	A	B	C	D	E	F	G	N.W.
MQL-225-350	200	350	68	35	150	100	100	23kg
MQL-225-400	200	400	68	35	200	100	100	27kg
MQL-235-550	200	550	83	40	270	120	150	42kg

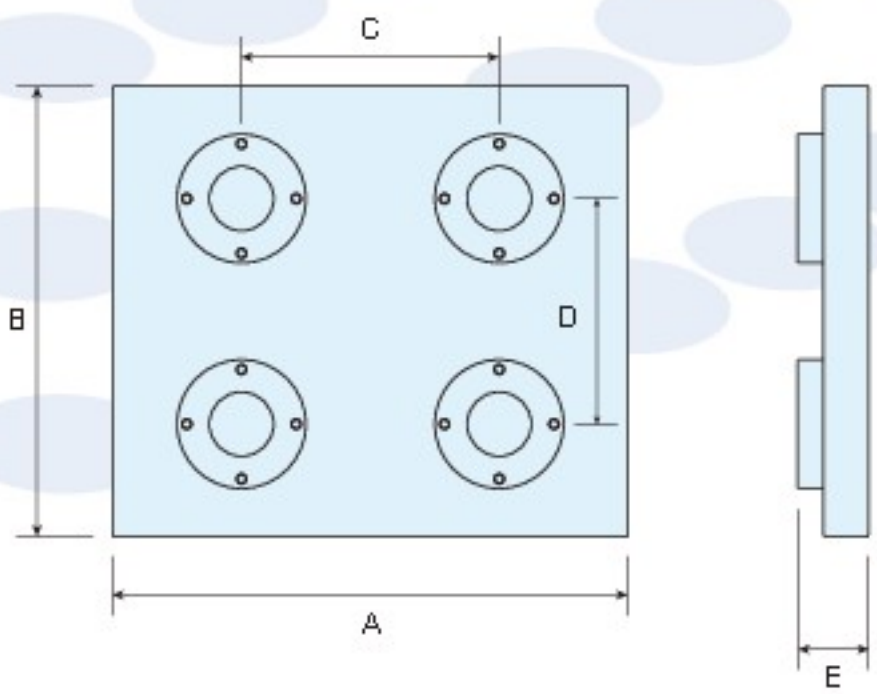

MODEL	A	B	C	D	E	N.W.
HQ-400-MQL	400	350	200	175	63	48kg
HQ-500-MQL	500	450	200	250	78	98kg

手動快速定位鎖緊裝置 MANUAL QUICK LOCK

ZERO-POINT-SYSTEMS

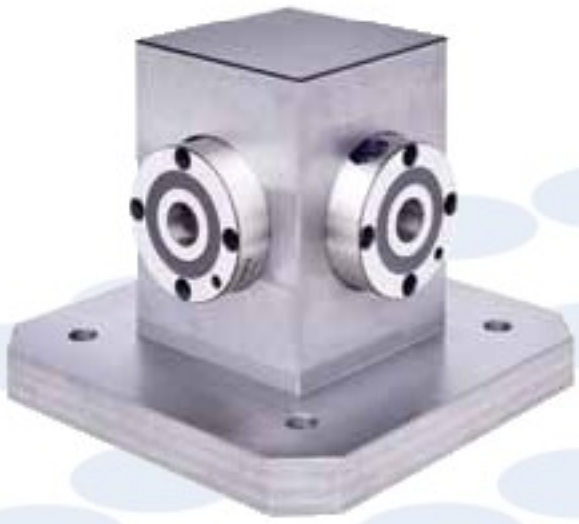

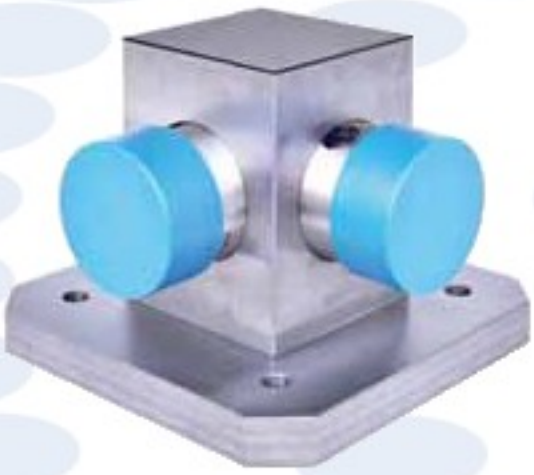

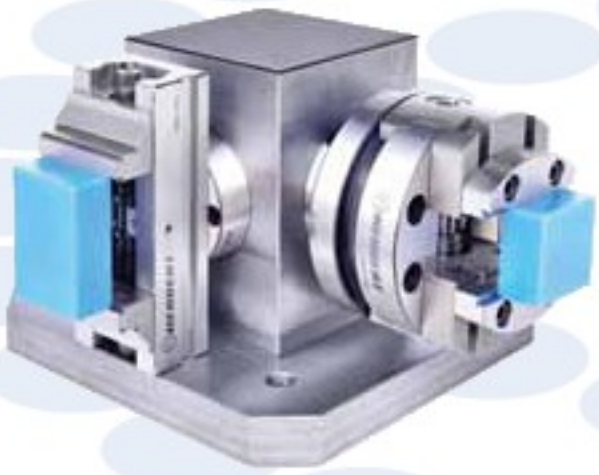

HERBERT ISO-9001:2015

手動快速定位鎖緊組裝模式 MANUAL QUICK LOCK

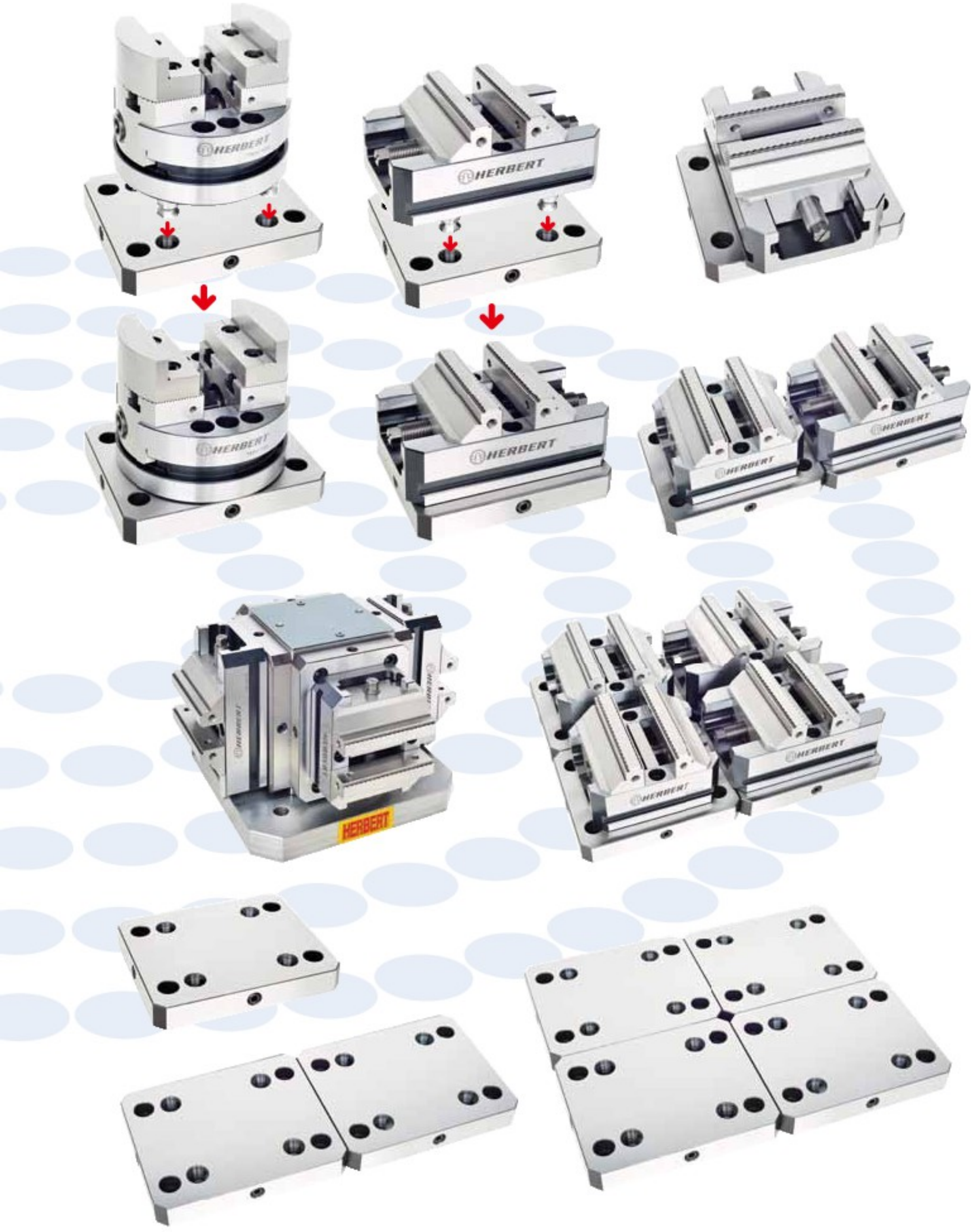

手動快速定位鎖緊裝置 MANUAL QUICK LOCK

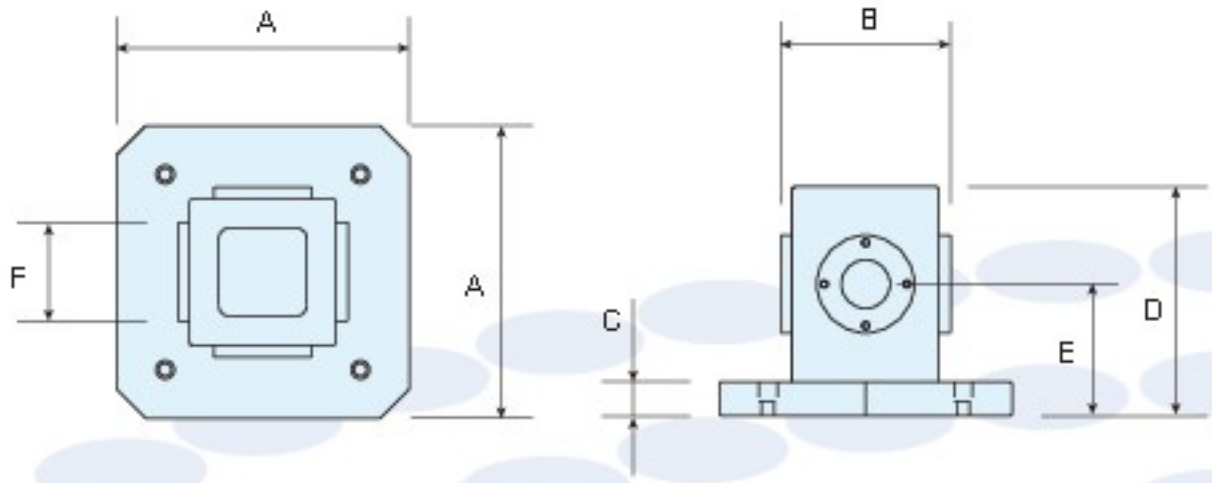

MODEL	A	B	C	D	E	F
HQL-300	300	150	500	300	175	100
HQL-400	400	200	50	400	200	150

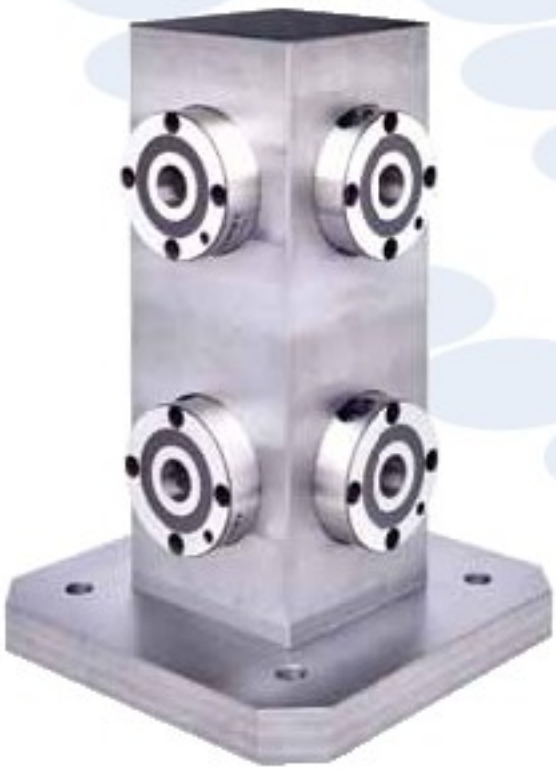

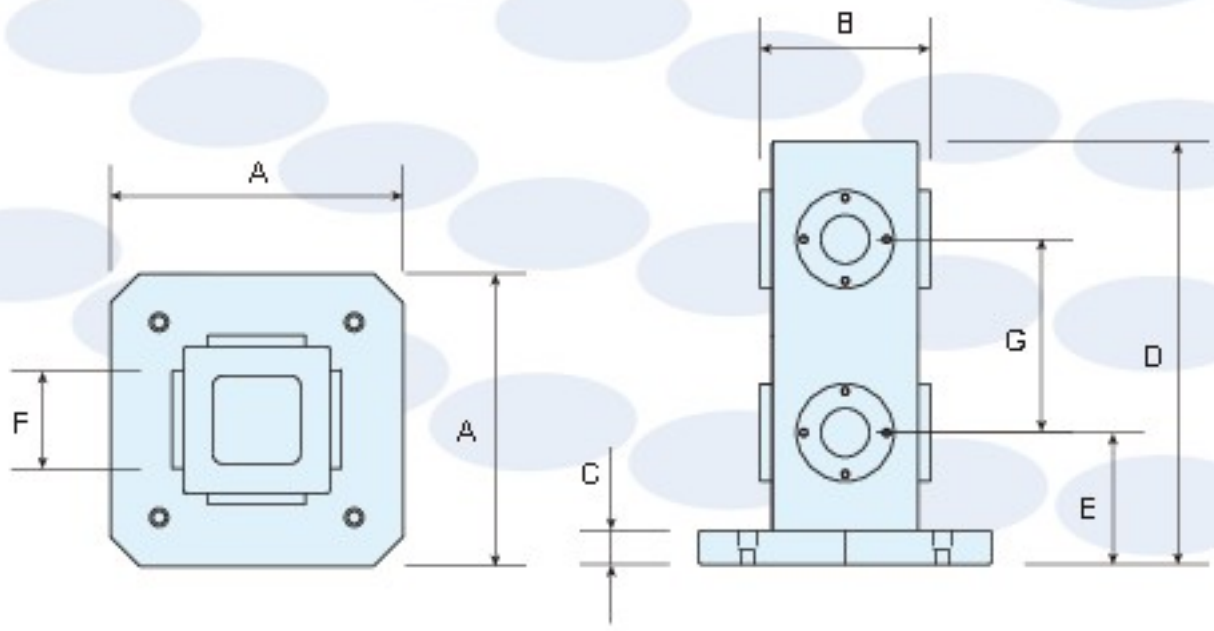

MODEL	A	B	C	D	E	F	G
HQL-300-2	300	150	50	500	175	100	200
HQL-400-2	400	200	50	600	200	150	250

HERBERT ISO-9001:2015

手動快速定位鎖緊裝置 MANUAL QUICK LOCK

專利號碼 PATENT NUMBER M598759

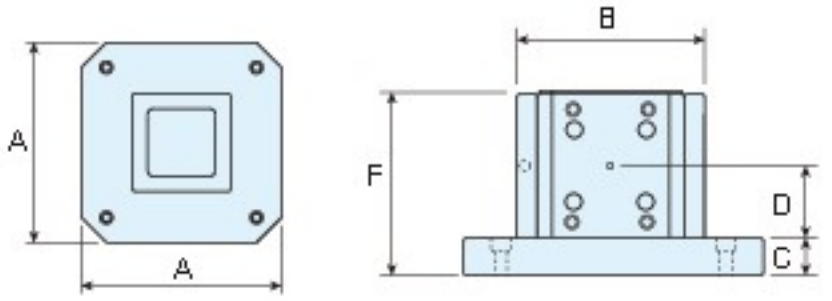

MODEL	A	B	C	D	E
MQL-96AT-1-4	400	230	50	96	245
MQL-52AT-1-4	300	180	50	75	200

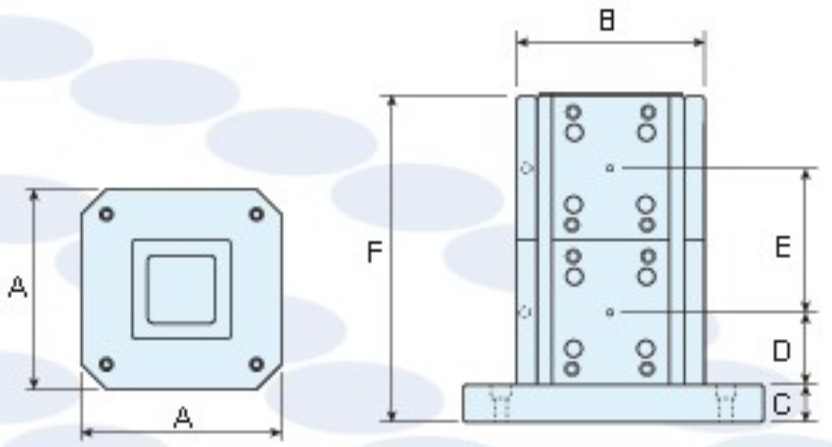

MODEL	A	B	C	D	E	F
MQL-96AT-2-4	500	250	50	96	192	434
MQL-52AT-2-4	400	210	50	75	150	305

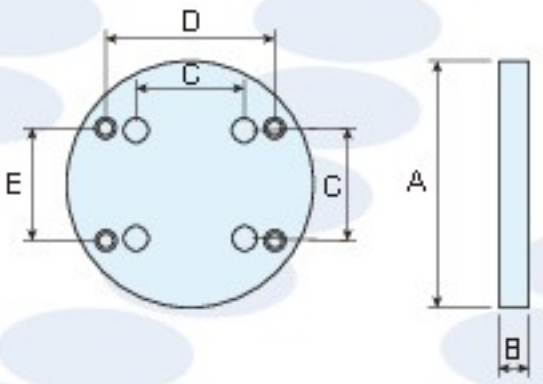

MODEL	A	B	C	D	E
MQL-96AQ	220	27	96	150	100
MQL-52AQ	180	27	52	100	50

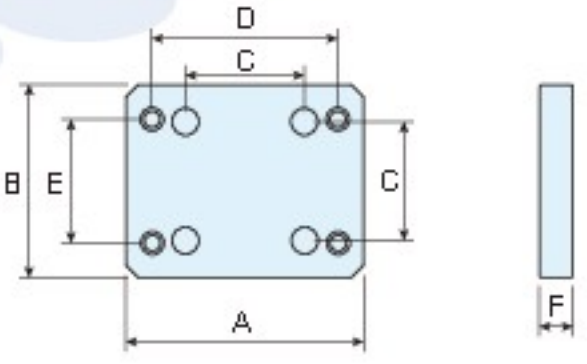

MODEL	A	B	C	D	E	F	N.W.
MQL-96A	192	156	96	150	100	27	6kg
MQL-52A	150	116	52	100	50	27	3.5kg

HERBERT ISO-9001:2015

快速換模系統 QUICK-CHANGE

專利號碼 PATENT NUMBER M358693

SYSTEMS

標準附件
Standard Accessories

HP-BLSx1, HM-BLSx2, BLS25x2

MODLE: BLS-300
BLS-400
BLS-500
BLS-630
BLS-800

特性：

此定位元件適用於快速換模系統以及CNC水平或垂直機器上。
(縮短耗時)重複性可以維持在正負0.01mm。
同時定位及鎖上。

Features:

This positioning unit is suitable for quick mold or fixture exchange on CNC horizontal or vertical machines. (Shortening loading time)
Repeatability can be retained within ±0.01mm.
Positioning and locking in an action.

MODLE: BLS-400x150x500
BLS-500x200x600
BLS-630x250x700
BLS-800x300x800

標準附件
Standard Accessories

BCB-BLSx1, BLS25x2, HM-BLSx2

HERBERT ISO-9001:2015

快速換模系統 QUICK-CHANGE

特性：

- 使用本快速換模系統，換模具時間可縮短一半時間。
- 使用本快速換模系統上下工作更快速。

Features:

- The working time can be cut in half within using quick-change system.
- Efficient in working.

MODLE: BLS-25

HP-BLS

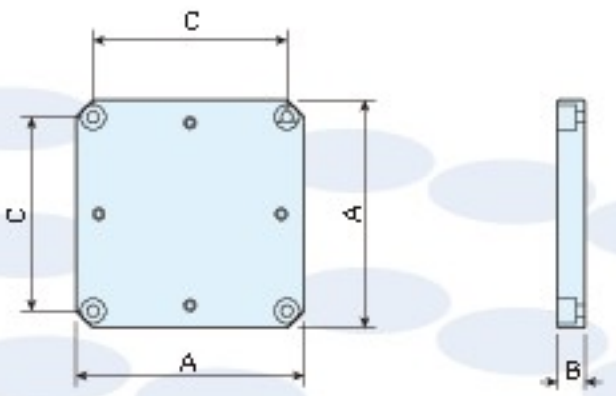

MODEL	A	B	C
HP-300x300x40-BLS	300	40	240
HP-400x400x40-BLS	400	40	320
HP-500x500x45-BLS	500	45	400
HP-630x630x50-BLS	630	50	500
HP-800x800x50-BLS	800	50	500

HM-BLS

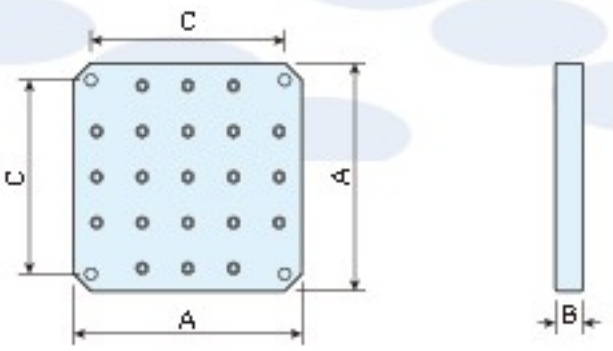

MODEL	A	B	C
HM-300x300x25-BLS	300	25	240
HM-400x400x25-BLS	400	25	320
HM-500x500x30-BLS	500	30	400
HM-630x630x30-BLS	630	30	500
HM-800x800x30-BLS	800	30	500

BCB-BLS

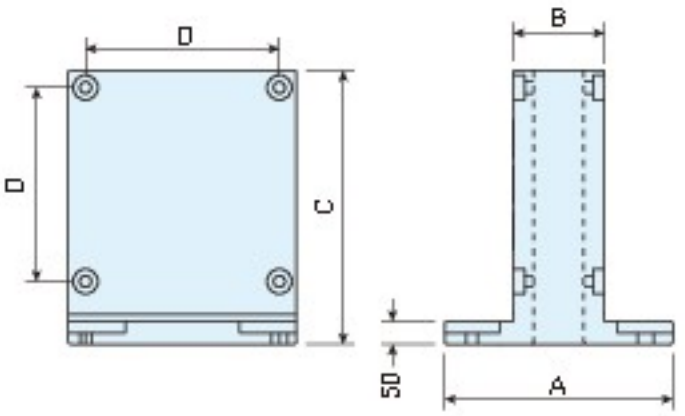

MODEL	A	B	C
BCB-400x150x500-BLS	400	150	500
BCB-500x200x600-BLS	500	200	600
BCB-630x250x700-BLS	630	250	700
BCB-800x300x800-BLS	800	300	800

- 比較使用此固定裝置與未使用所需的時間差異。
- 圖A說明 安裝此固定裝置所耗的時間大約為30秒。
- 圖B說明 安裝此固定裝置所耗的時間大約為5分30秒。

- The comparison of time taken tolock a fixture with or withoutthis quick-change positioning unit:
- It takes about 30 seconds to mount the fixture in Fig. A.
- It takes about 5 minutes 30 seconds to mount the fixture in Fig. B.

HERBERT ISO-9001:2015

附第四軸快速換模系統 QUICK-CHANGE

專利號碼 PATENT NUMBER M358693

ZERO-POINT-SYSTEMS

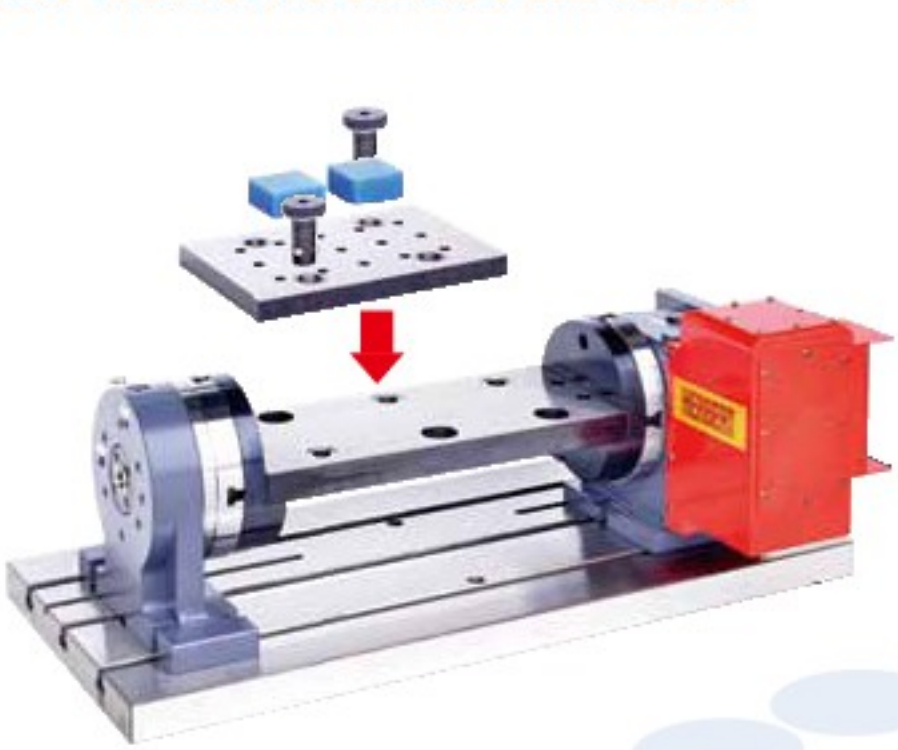

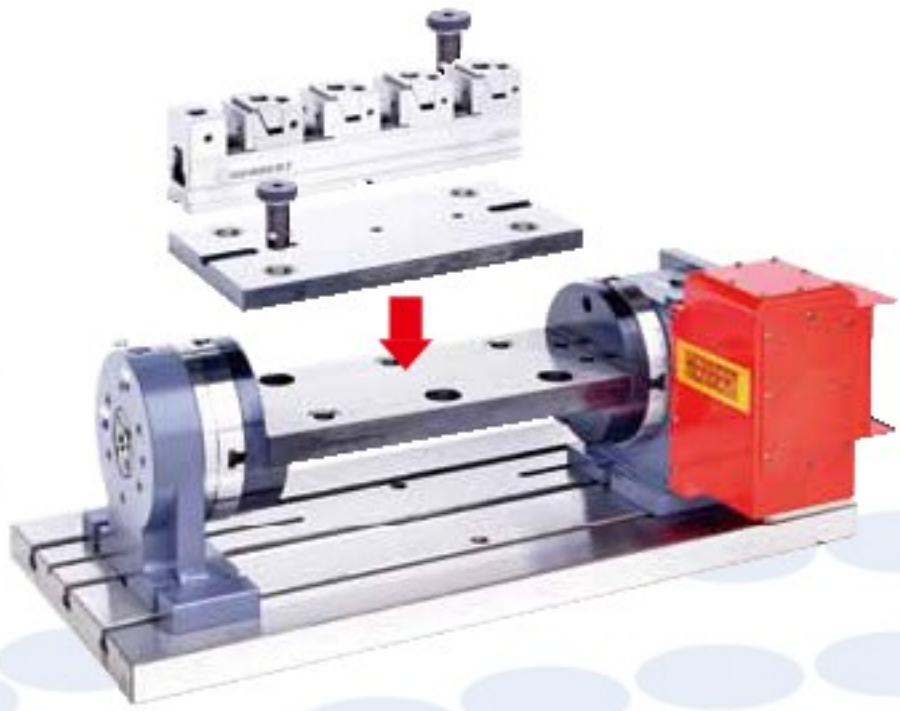

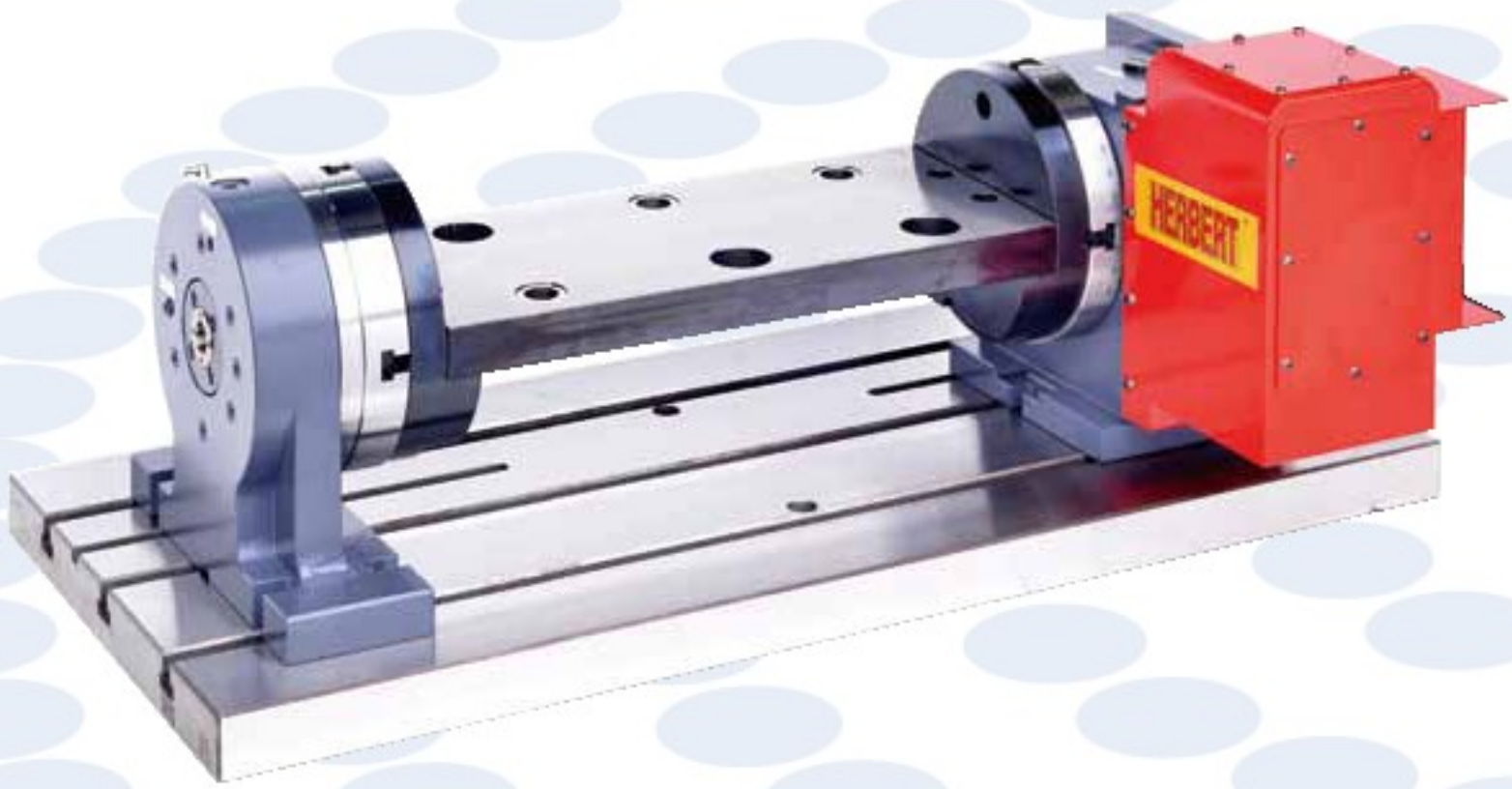

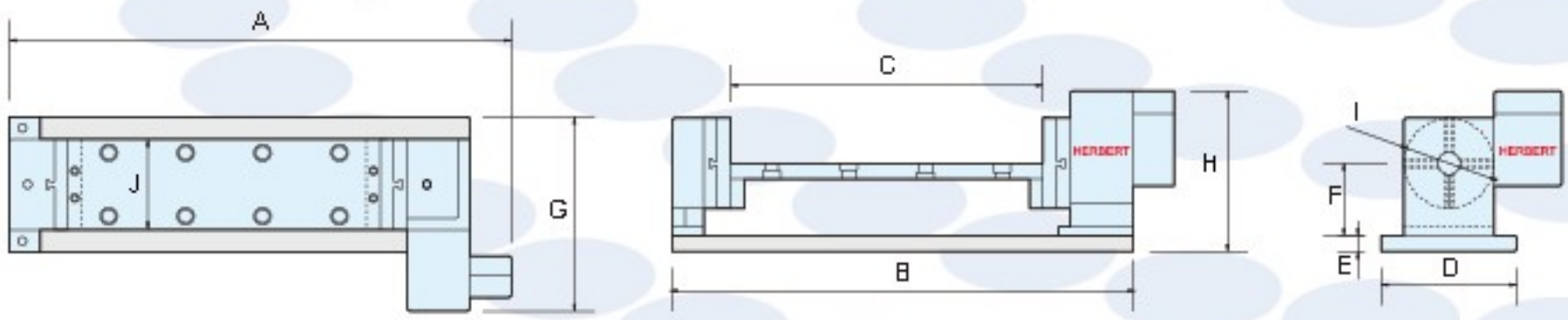

MODEL	A	B	C	D	E	F	G	H	I	J
BLS-2520	650	570	310	300	40	160	430	355	160	200
BLS-4020	840	720	460	300	40	160	430	355	160	200
BLS-5020	900	820	560	300	45	160	430	355	160	200
BLS-6320	1030	950	690	300	50	160	430	355	160	200
BLS-2530	650	570	310	400	40	210	480	405	160	300
BLS-4030	840	720	460	400	40	210	480	405	160	300
BLS-5030	900	820	560	400	45	210	480	405	160	300
BLS-6330	1030	950	690	400	50	210	480	405	160	300

HERBERT ISO-9001:2015

附第四軸快速換模系統 QUICK-CHANGE

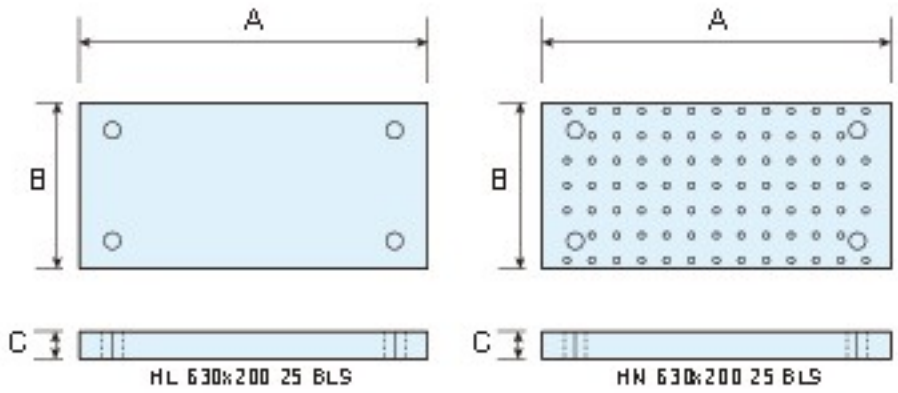

MODEL	A	B	C
HL-250x200-25-BLS	250	200	25
HL-400x200-25-BLS	400	200	25
HL-500x200-25-BLS	500	200	25
HL-630x200-25-BLS	630	200	25
HN-250x200-25-BLS	250	200	25
HN-400x200-25-BLS	400	200	25
HN-500x200-25-BLS	500	200	25
HN-630x200-25-BLS	630	200	25

MODEL	A	B	C
HL-250x300-25-BLS	250	300	25
HL-400x300-25-BLS	400	300	25
HL-500x300-25-BLS	500	300	25
HL-630x300-25-BLS	630	300	25
HN-250x300-25-BLS	250	300	25
HN-400x300-25-BLS	400	300	25
HN-500x300-25-BLS	500	300	25
HN-630x300-25-BLS	630	300	25

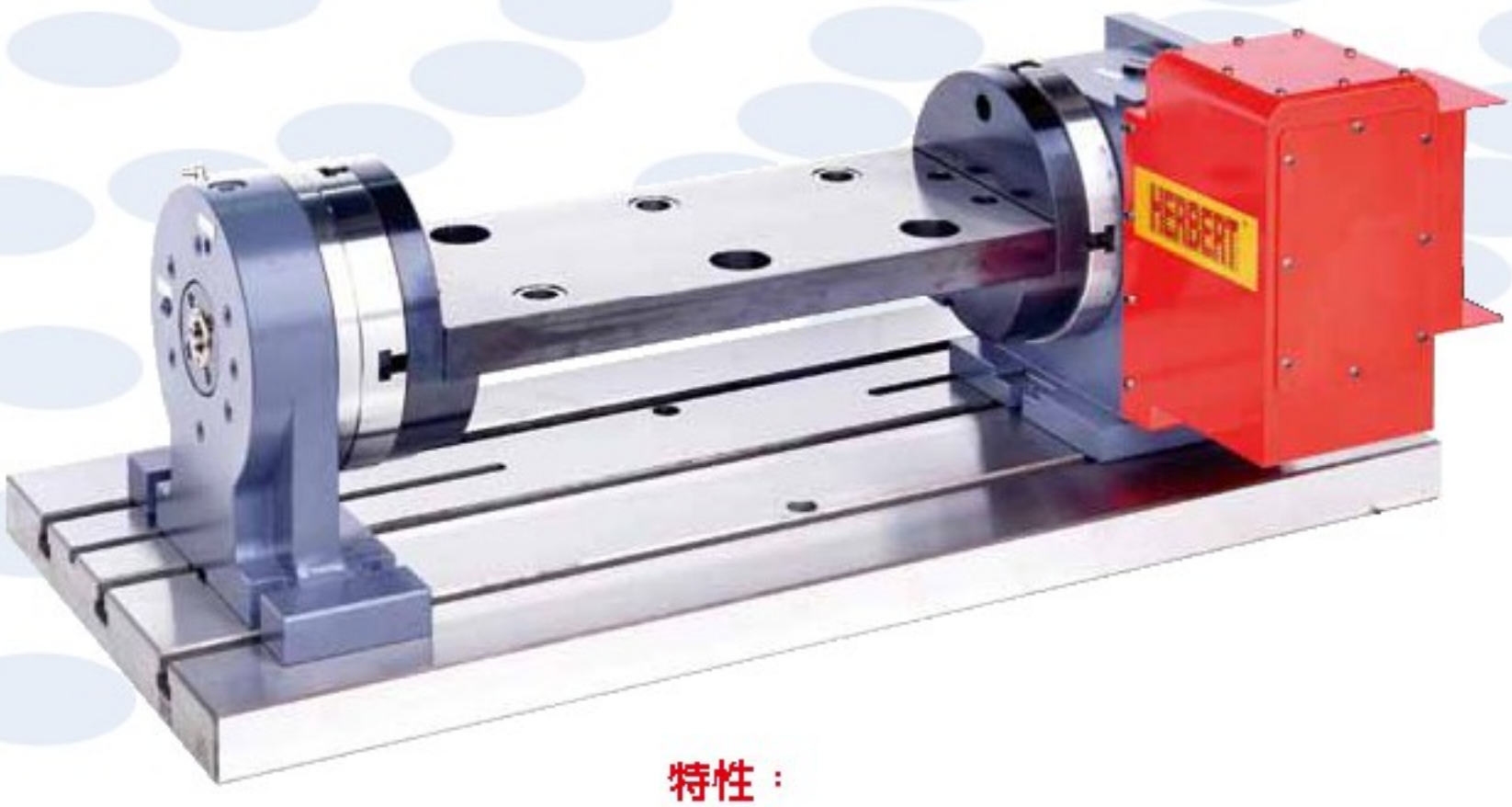

特性：

- 使用本快速換模系統，換模具時間可縮短一半時間。
- 使用本快速換模系統上下工作更快速。

Features:

- The working time can be cut in half within using quick-change system.
- Efficient in working.

HERBERT

豪伯特企業有限公司

http://www.her-bert.com