HERBERT

MULTIGRIP VISES

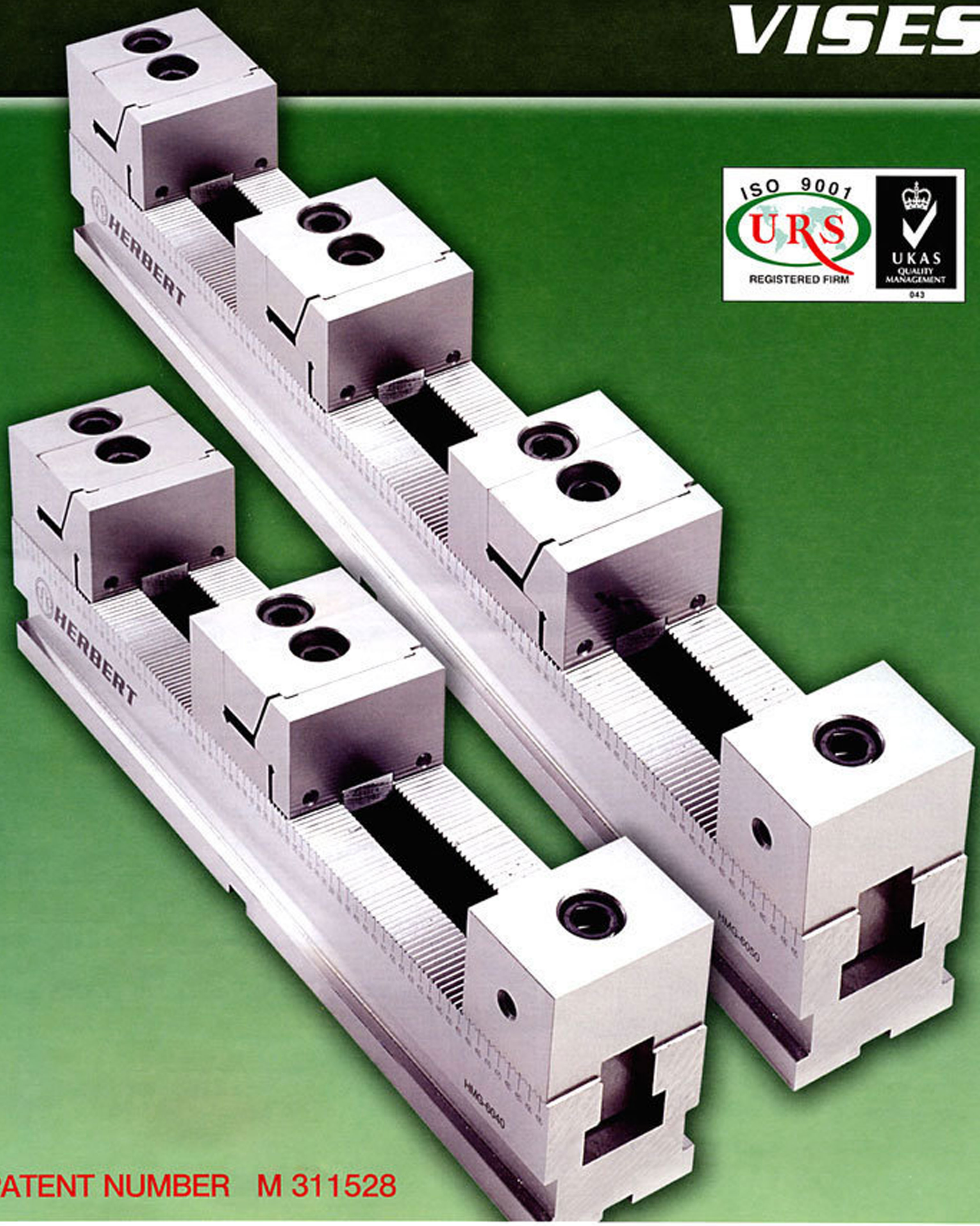

ISO 9001 URS REGISTERED FIRM

UKAS QUALITY MANAGEMENT 043

PATENT NUMBER M 311528

HERBERT

豪伯特企業有限公司
HER BERT ENTERPRISE CO., LTD.
No. 40, Lane 157, Min You Rd., Chine Shui,Taichung Hsine 436 ,Taiwan
Tel: 886-4-2627-5073 Fax:886-4-2627-1395
http://www.her-bert.com E-mail:her.bert@msa.hinet.net ; jadori@tcts.seed.net.tw

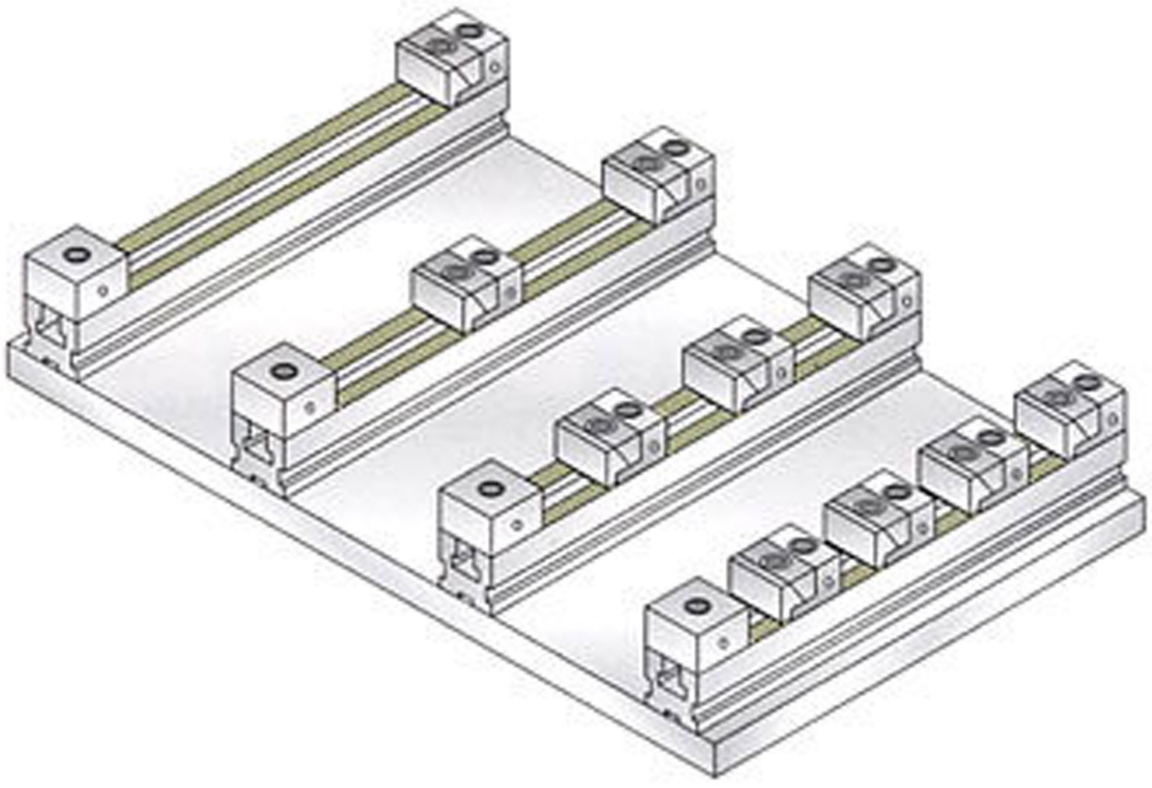

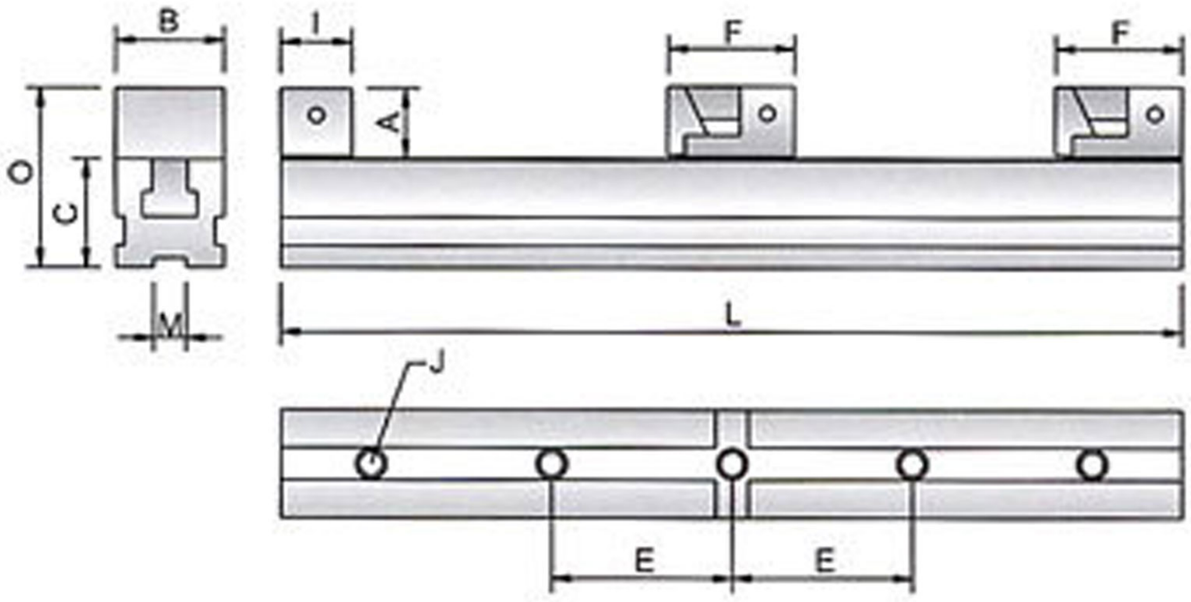

	1	1 2	1 2 3	1 2 3 4
HMG-6025	120	25		
HMG-6040	270	100	43	15
HMG-6050	370	150	76	40
HMG-6063	500	215	120	73
HMG-9025	99			
HMG-9040	249	84	29	
HMG-9050	349	134	62	26
HMG-9063	479	199	106	59

MODEL	A	B	C	E	F	I	J	L	M	O	G.W.
HMG-6025	40	60	60	100	70	50	M12	250	18	100	6.5kg
HMG-6040	40	60	60	100	70	50	M12	400	18	100	9.5kg
HMG-6050	40	60	60	100	70	50	M12	500	18	100	11.5kg
HMG-6063	40	60	60	100	70	50	M12	630	18	100	13.5kg

MODEL	A	B	C	E	F	I	J	L	M	O	G.W.
HMG-9025	45	90	70	100	80	60	M16	250	18	115	11kg
HMG-9040	45	90	70	100	80	60	M16	400	18	115	16kg
HMG-9050	45	90	70	100	80	60	M16	500	18	115	19.5kg
HMG-9063	45	90	70	100	80	60	M16	630	18	115	23.5kg

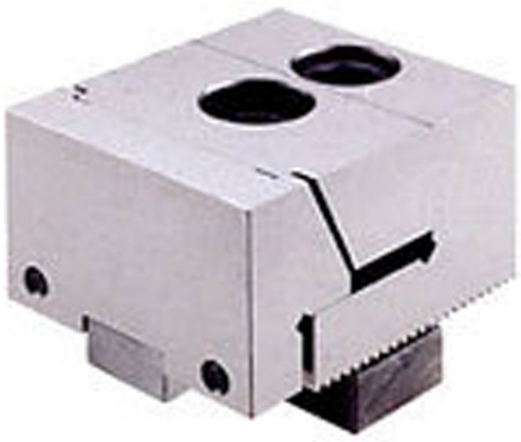

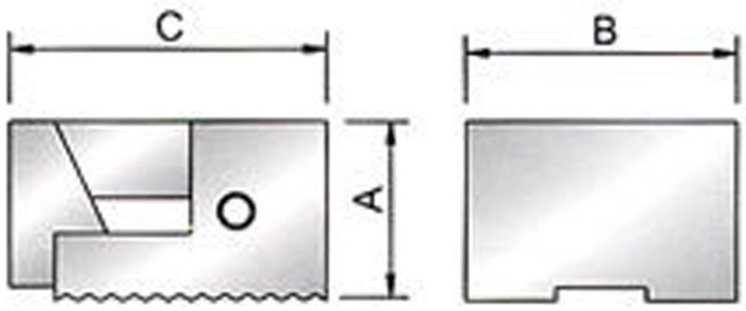

MODEL	A	B	C	G.W.
HMG-60A	40	60	70	1.4kg
HMG-90A	45	90	80	2.9kg

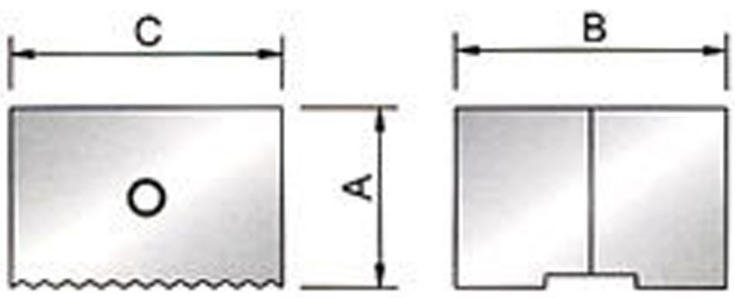

MODEL	A	B	C	G.W.
HMG-60B	40	60	50	1.4kg
HMG-90B	45	90	60	2.9kg