手動快速鎖緊裝置
MANUAL QUICK LOCK

MANUAL QUICK LOCK

手動快速鎖緊裝置
MANUAL QUICK LOCK

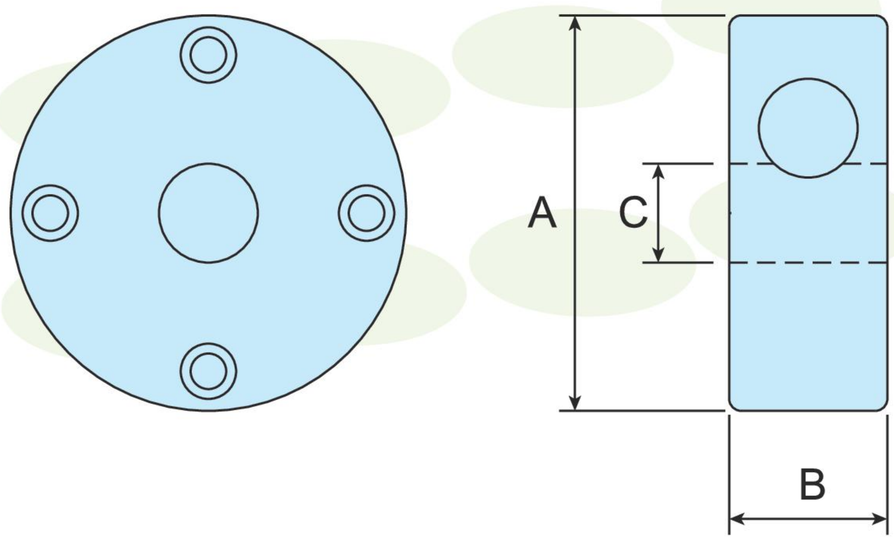

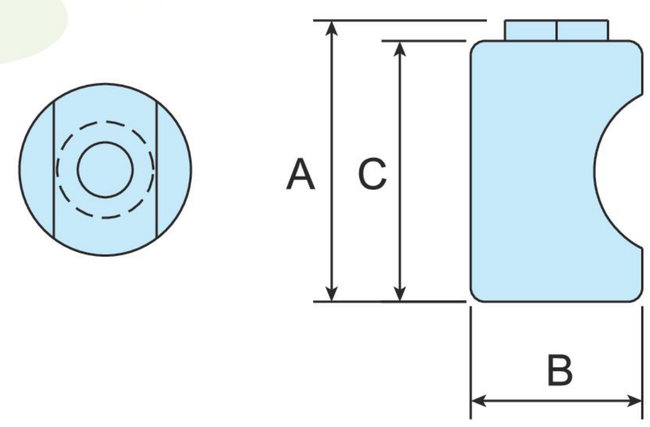

MODEL	A	B	C
MQL-25	100	40	25
MQL-35	148	50	35

MODEL	A	B	C
MQL-25A	43	25	40
MQL-35A	53	35	50

手動快速鎖緊裝置
MANUAL QUICK LOCK

MANUAL QUICK LOCK

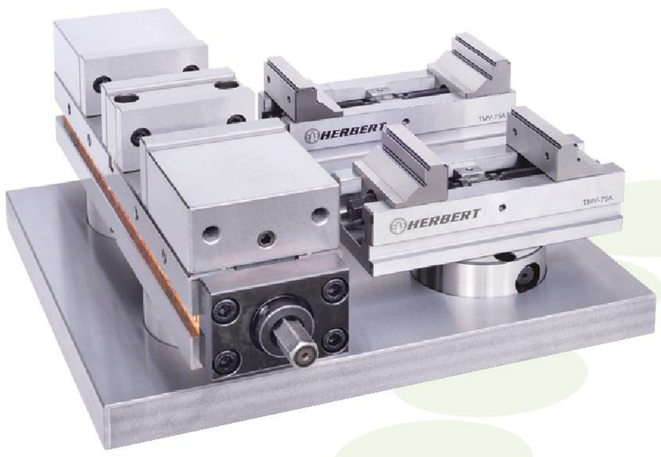
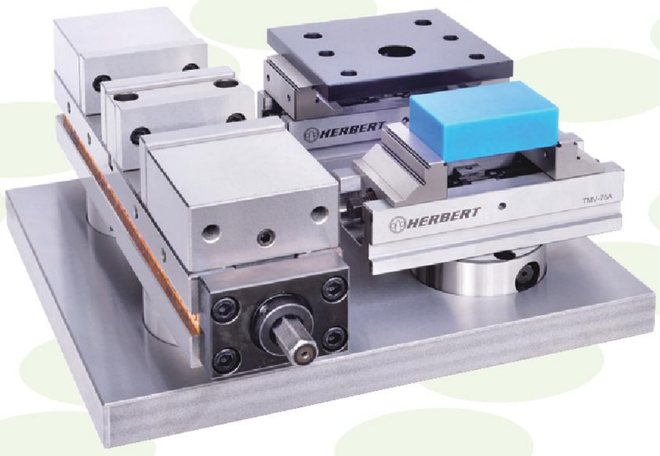
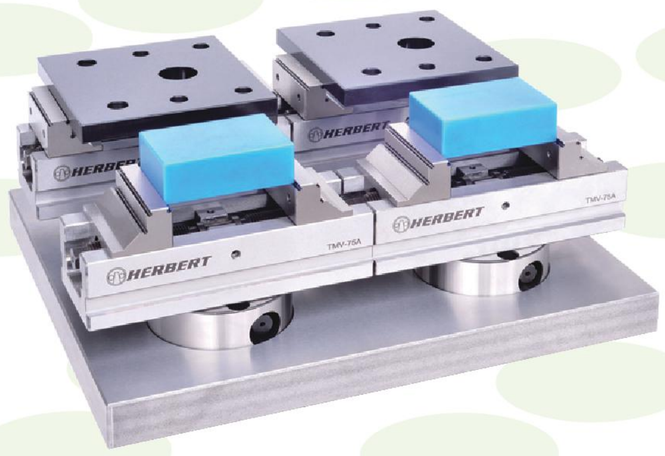
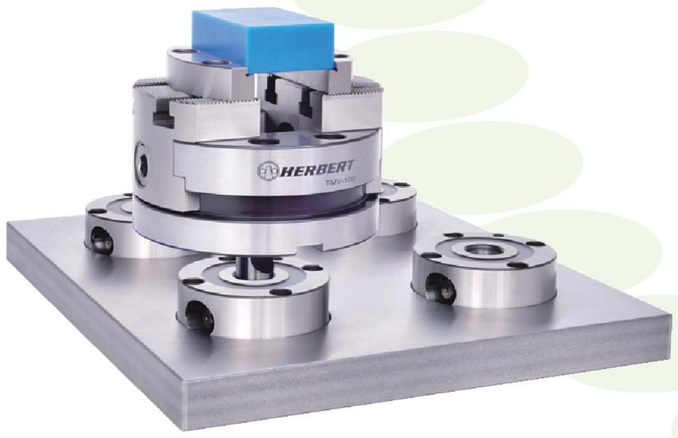

手動快速鎖緊裝置
MANUAL QUICK LOCK

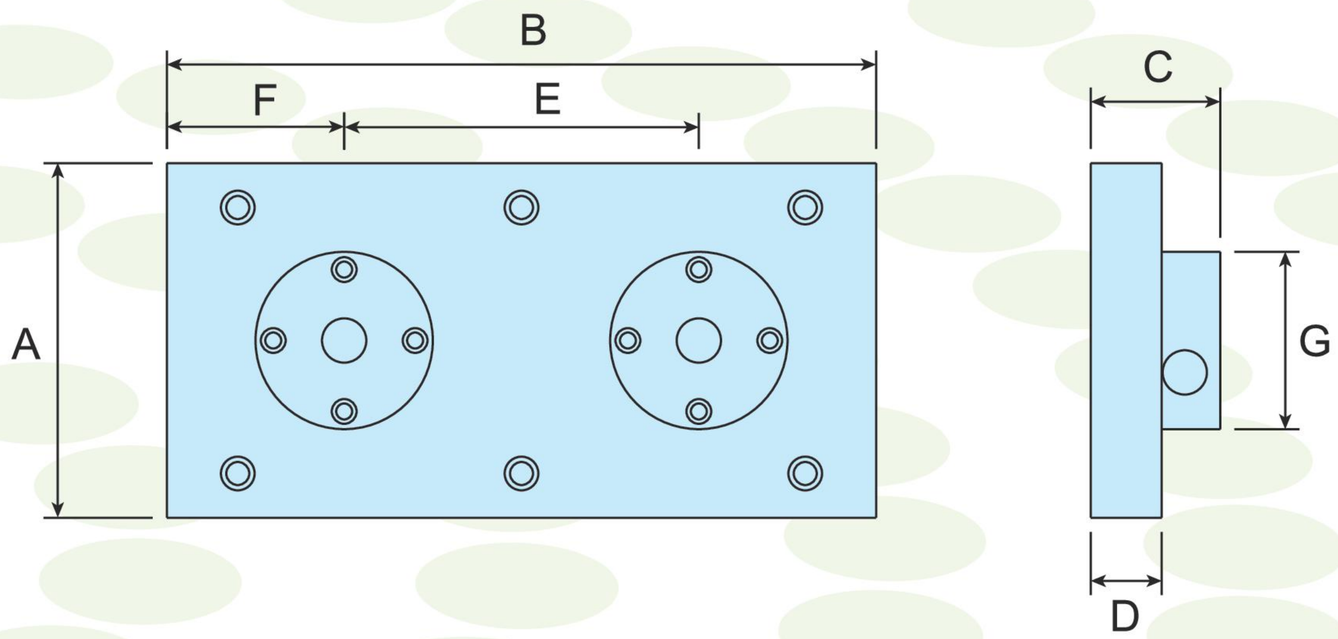

MODEL	A	B	C	D	E	F	G
MQL-225-350	200	350	68	35	150	100	100
MQL-225-400	200	400	68	35	200	100	100
MQL-235-550	200	550	93	40	270	120	150

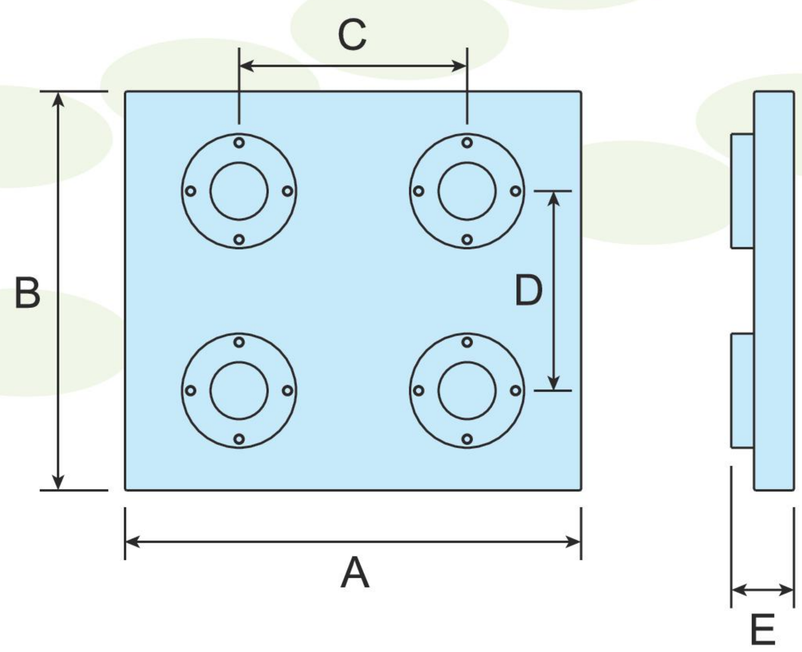

MODEL	A	B	C	D	E
HQ-400-MQL	400	350	200	175	63
HQ-500-MQL	500	450	200	250	78

手動快速鎖緊裝置
MANUAL QUICK LOCK

MANUAL QUICK LOCK

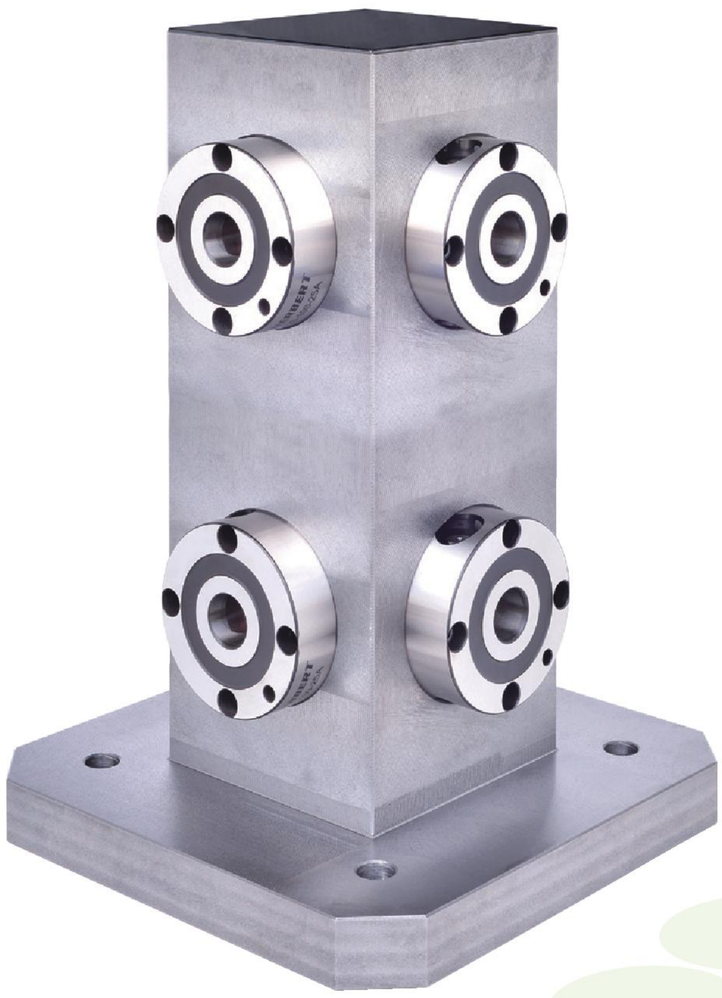

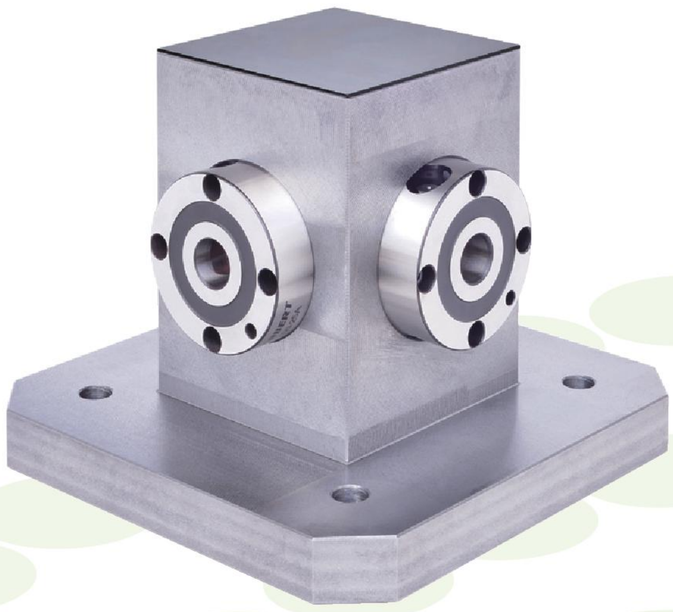

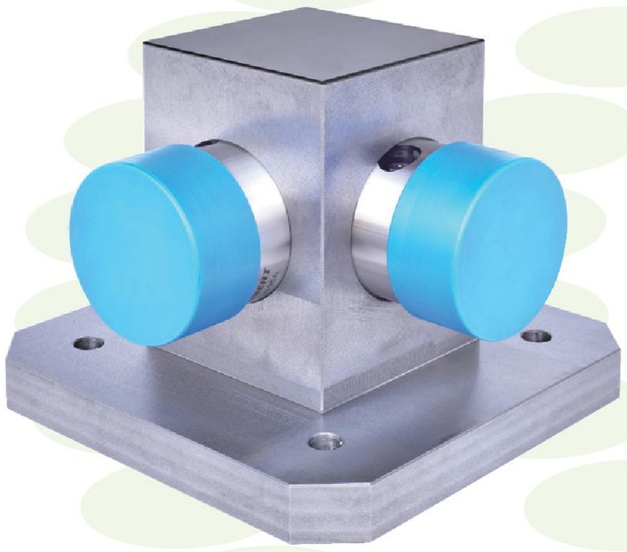

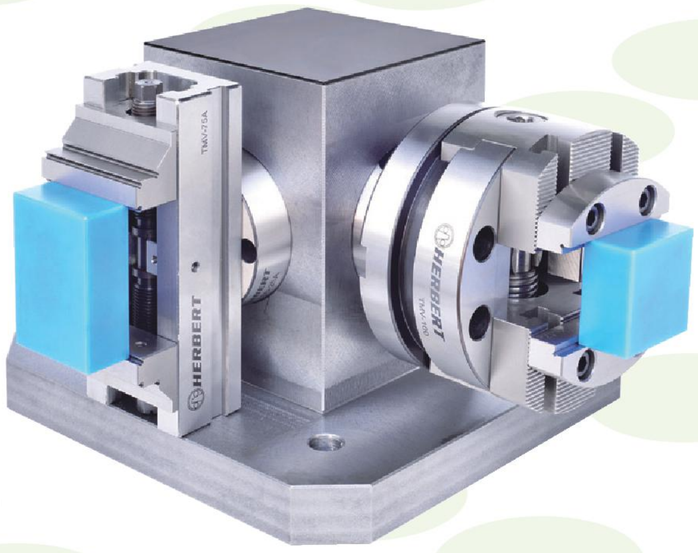

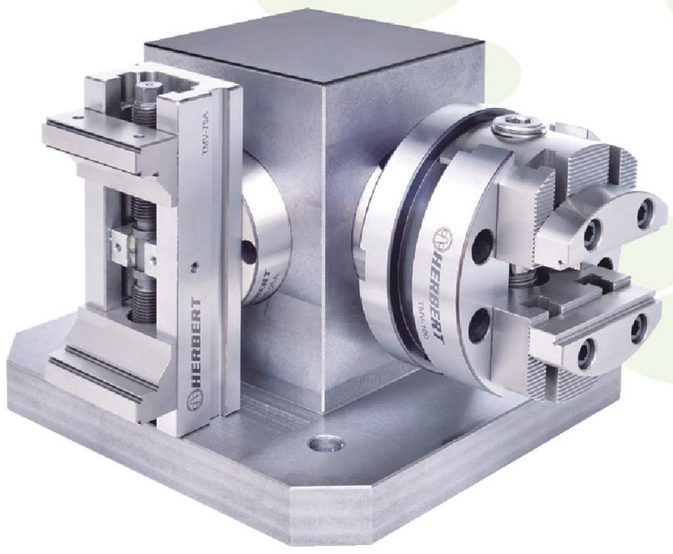

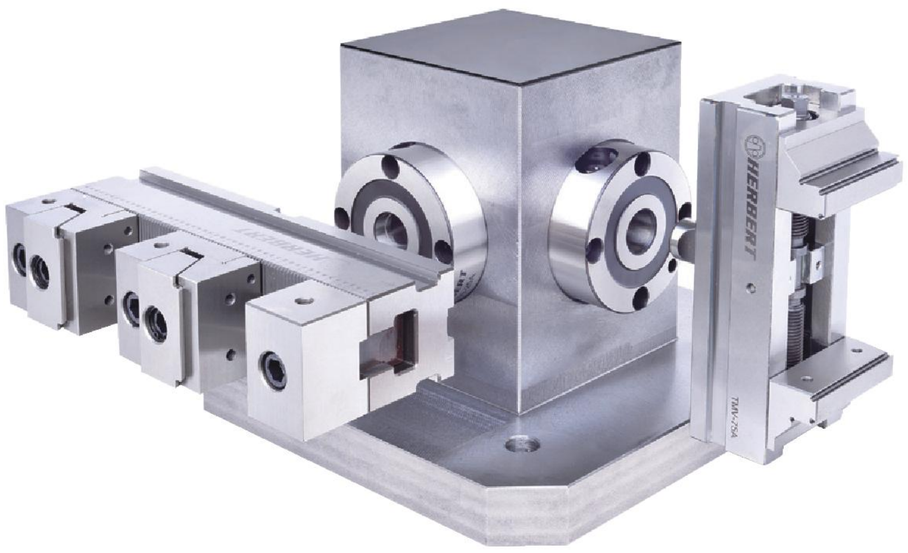

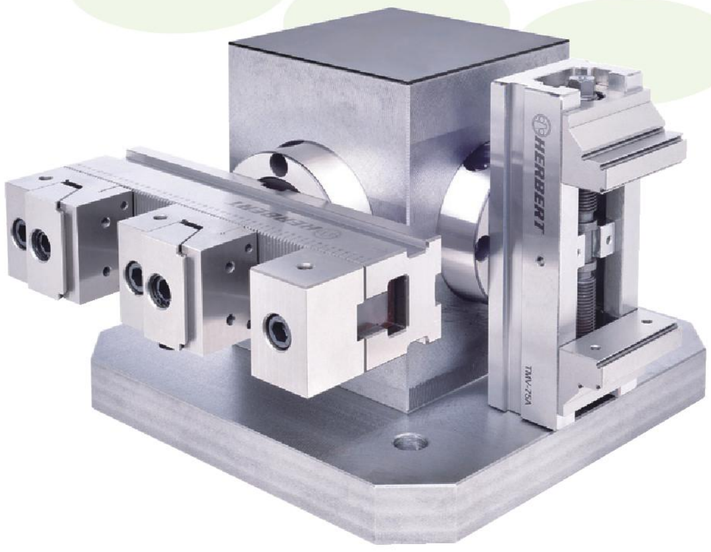

手動快速鎖緊裝置
MANUAL QUICK LOCK

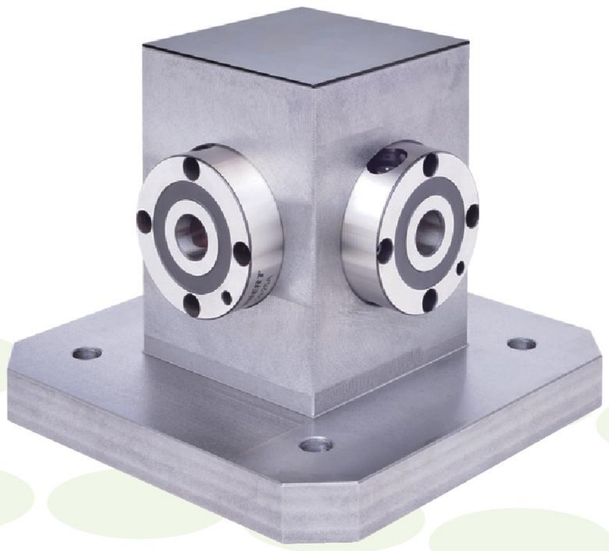

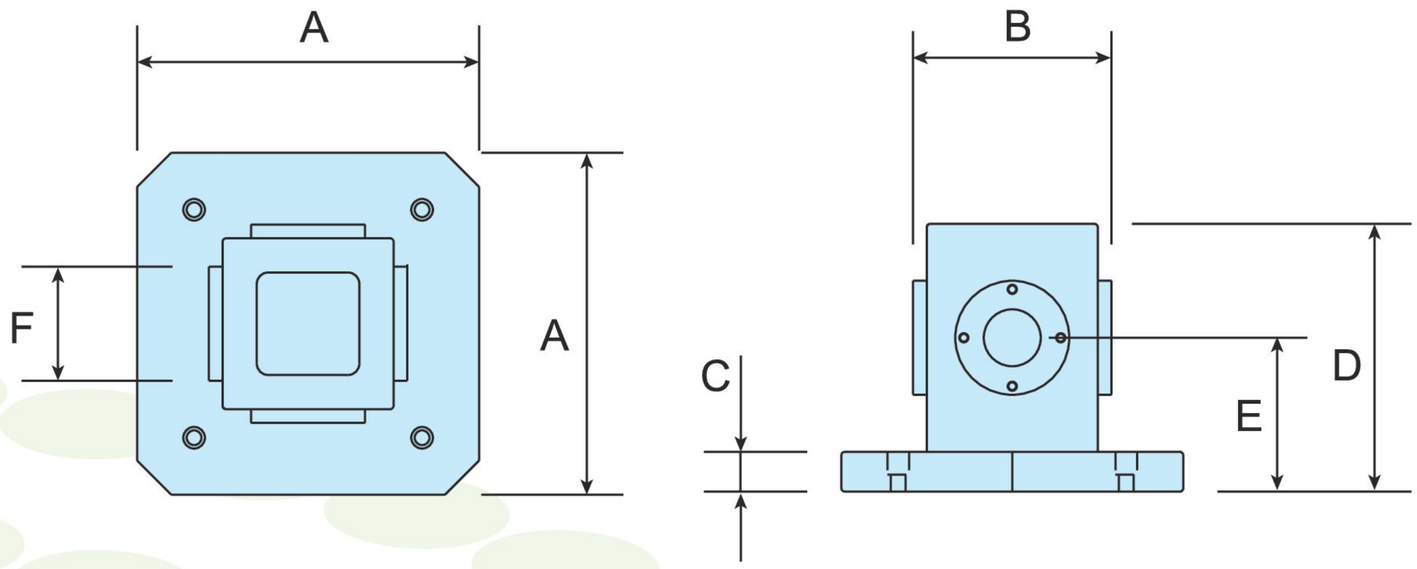

MODEL	A	B	C	D	E	F
HQL-300	300	150	50	300	175	100
HQL-400	400	200	50	400	200	150

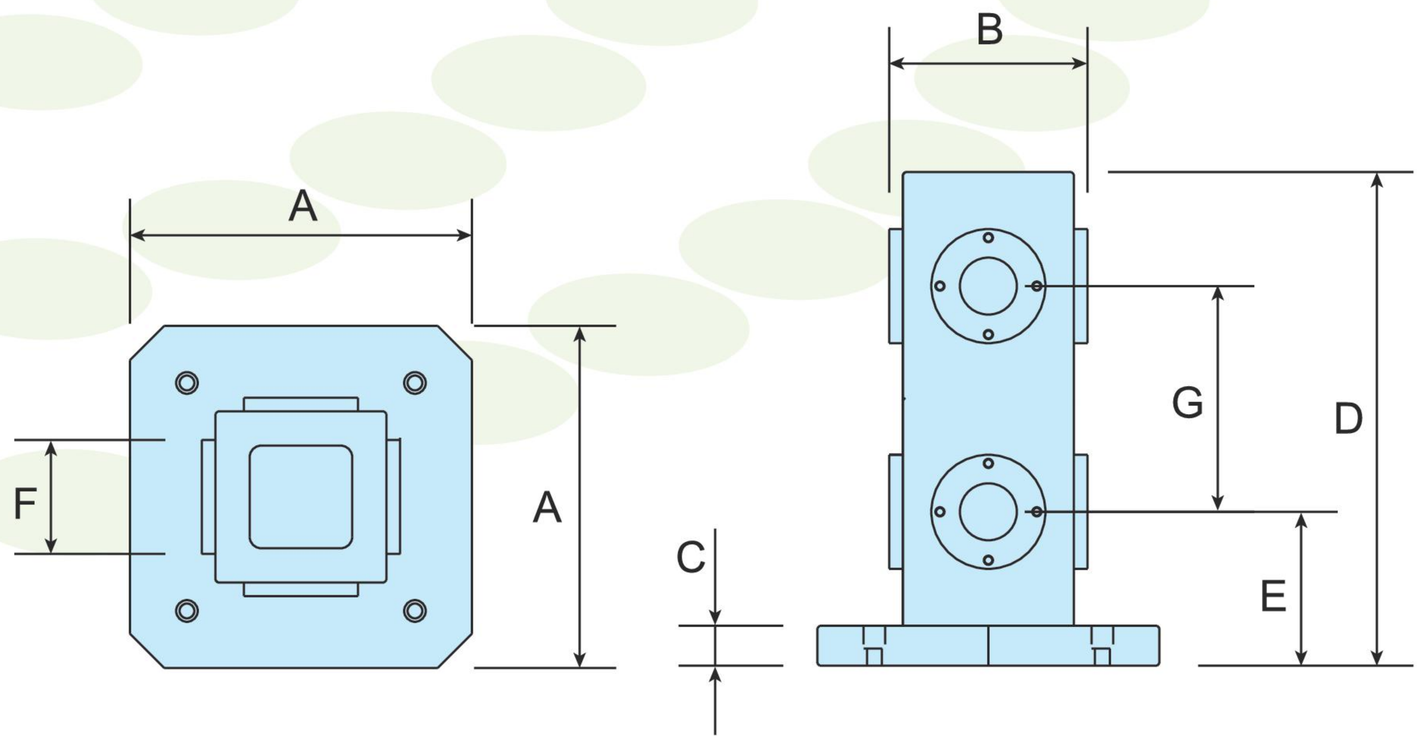

MODEL	A	B	C	D	E	F	G
HQL-300-2	300	150	50	500	175	100	200
HQL-400-2	400	200	50	600	200	150	250

SPECIAL PURPOSE VISES:
VISES FOR 5-SIDE MACHINING & TURNING CENTERS

CORNER Most kindly design to considered every tiny point.

High strength. High accuracy.

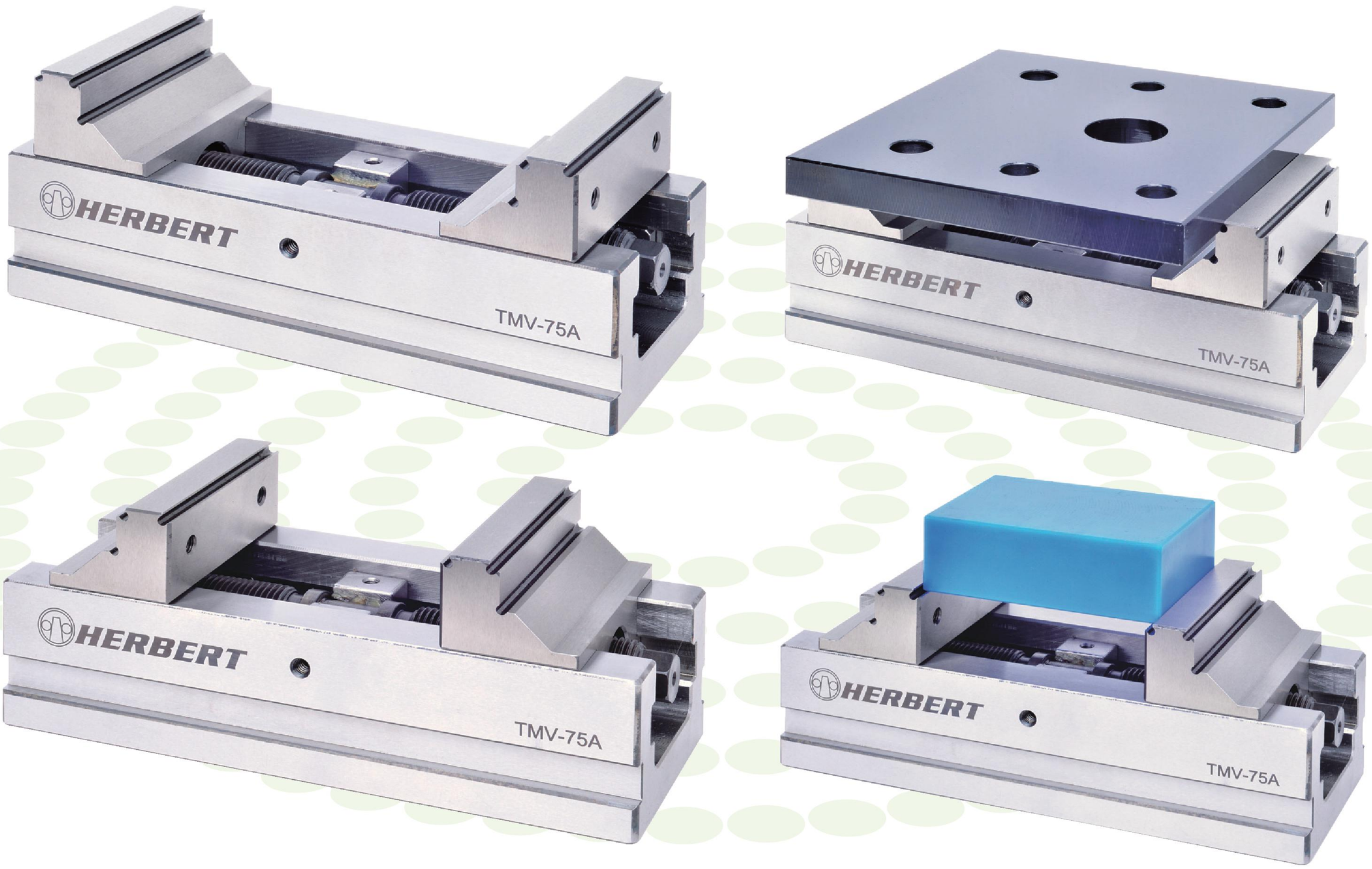

A good solution for clamping on both turning centres and 5-axis milling machines.

- For quick & easy work piece clamping on turning centres or for 5-axis machining on machine centres. Round-shaped style occupies less space and reduces interference.
  Available are different styles of vise jaws for different machining needs.

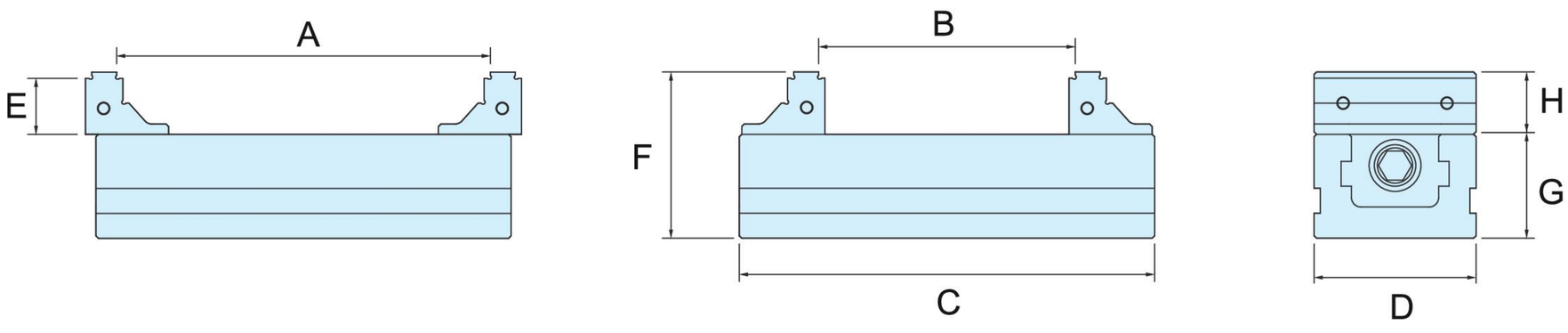

MODEL	A	B	C	D	E	F	G	H
TMV-75A	180	123	200	78	27	80	50	30

HERBERT

豪伯特企業有限公司
HER BERT ENTERPRISE CO., LTD.

手動快速鎖緊裝置
MANUAL QUICK LOCK

ISO 9001 URS REGISTERED FIRM

UKAS QUALITY MANAGEMENT 043

專利產品 請勿仿冒

HERBERT http://www.her-bert.com
豪伯特企業有限公司
台中市清水區民有路157巷40號
No.40, Ln. 157, Minyou Rd., Qingshui Dist.,
Taichung City 436, Taiwan
TEL:886-4-2627-5073 FAX:886-4-2627-1395
E-mail:her.bert@msa.hinet.net