UNIVERSAL HYDRAULIC TILTING VICE

ISO-9001:2008

Hydraulic

The vice different from conventional vice, than can be adjusted angle of workpiece directly, perpendicular direction adjustable angle from 0 X to 50 X, which can read process angle accurately.

The whole Swivel Base are made by Stainless Steel, with harden treatment, durable and high accurate.

Standard Accessories

1.Handle-1 set

Optional Accessories

1.Special application jaw plates
2.Vise positioner
3.Swivel Base

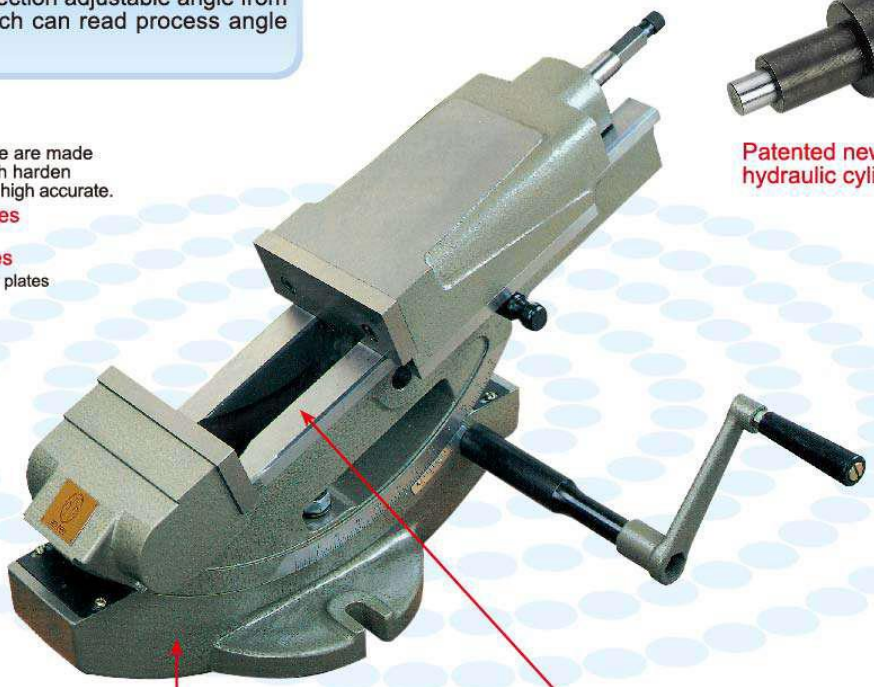

Patented new device hydraulic cylinder

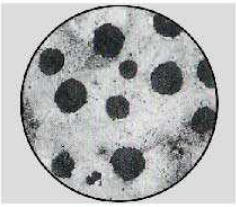

- Material: ductile iron FCD-60.

- Heat treatment (over HRC45º).

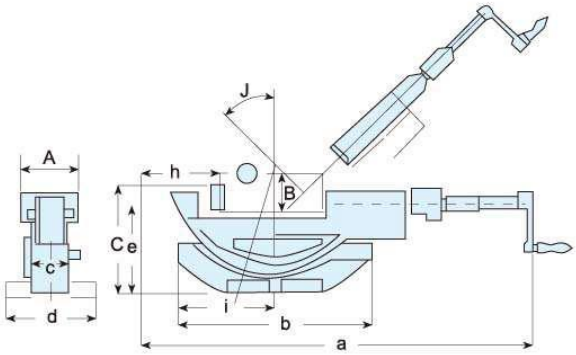

MODEL	A	B	C	a	b	c	d	e	h	i	J	Body weight	Base weight	POWER
HN-100	100	36	170	525	330	65	162	177	90	172	50	24kg	6kg	2540kgf
HN-150	154	53	300	801	415	95	242	237	121	241	50	68kg	14kg	4400kgf