HERBERT

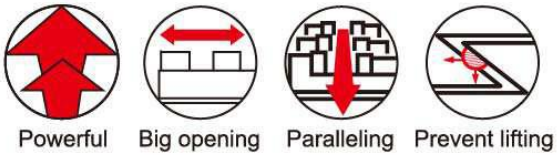

'LOCK-TIGHT' MACHINE VISES

MC MECHANICAL-TYPE PRECISION VICE

CORNER **Most kindly design to considered every tiny point.**

Note : If opening 300mm need dismantle chip cover.

High strength. High accuracy.

- This unit had prevent lifting structure, when clamping in down direction power also acting, so the workpiece and movable parts lift very small, furthermore, the body and solid jaw is a combination structure, it does not tilt.

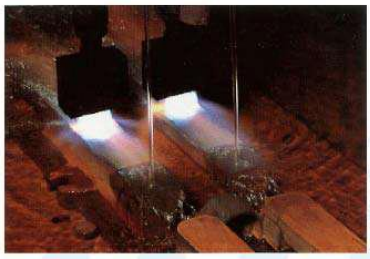

- The common contact face and slide face of movable parts both with good wear resistance of treat heatment (over HRC45˚)

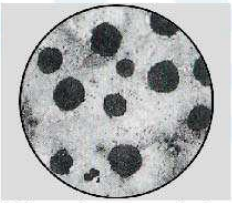

Microphotograph for ductile cast iron

Ductile cast iron spring.

- Ductile cast iron is fit to produce rigid precision items, which have three times strengthen than same grade vise due to used ductile cast iron.

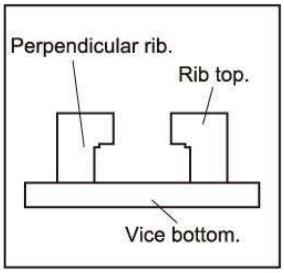

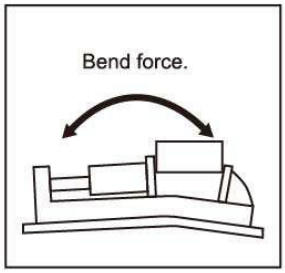

- Perpendicular rib structure which has great resistance to bending strain of vice. It could hardly due to clamping to bring bend.

ISO-9001:2008

POWERFUL HYDRAULIC MECHANICAL

MPV

MHV

MB

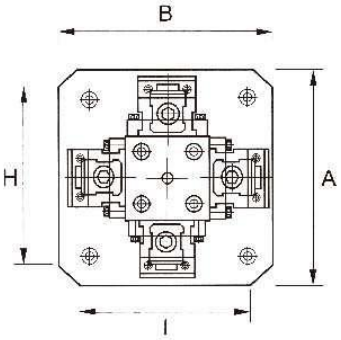

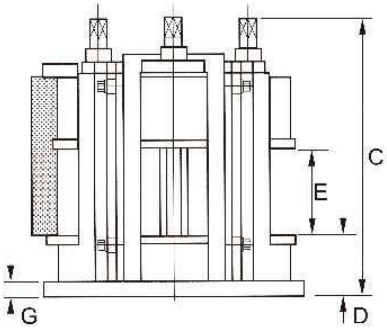

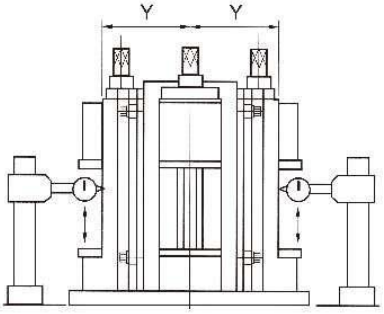

NO	TEST ITEM	GURARANTEED	REMARK
1	Both vise jaw plate parallel wiithin 0.02mm	0.020mm	-
2	Vise "Y" omension with 0.020mm	0.020mm	-
3	Vise on bottom of vise bed square within 0.010mm/100mm	0.010/100mm	-

MODEL	A	B	C	D	E	F	G	H	I	POWER
MB-100 4VL	450	450	530	120	150	45	40	320	320	-
MB-130 4VL	500	500	580	125	200	50	40	400	400	-
MB-160 4VL	500	500	680	143	280	60	40	400	400	-
MB-200 4VL	600	600	730	148	300	70	40	500	500	-
MHV-100 4VL	450	450	570	120	145	45	40	320	320	4000kgf
MHV-130 4VL	500	500	620	125	190	50	40	400	400	4500kgf
MHV-160 4VL	500	500	720	143	265	60	40	400	400	5000kgf
MHV-200 4VL	600	600	770	148	300	70	40	500	500	5500kgf
MPV-100 4VL	450	450	570	120	150	45	40	320	320	4000kgf
MPV-130 4VL	500	500	620	125	200	50	40	400	400	4500kgf
MPV-160 4VL	500	500	720	143	280	60	40	400	400	5000kgf
MPV-200 4VL	600	600	770	148	300	70	40	500	500	5500kgf