QUICK-CHANGE

ISO-9001:2008

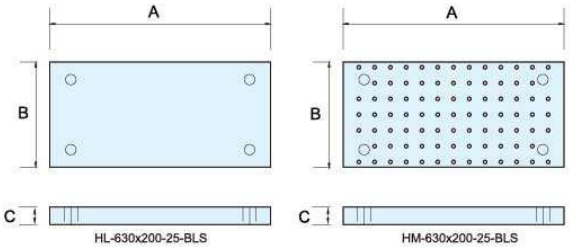

MODEL	A	B	C
HL-250x200-25-BLS	250	200	25
HL-400x200-25-BLS	400	200	25
HL-500x200-25-BLS	500	200	25
HL-630x200-25-BLS	630	200	25
HM-250x200-25-BLS	250	200	25
HM-400x200-25-BLS	400	200	25
HM-500x200-25-BLS	500	200	25
HM-630x200-25-BLS	630	200	25

MODEL	A	B	C
HL-250x300-25-BLS	250	300	25
HL-400x300-25-BLS	400	300	25
HL-500x300-25-BLS	500	300	25
HL-630x300-25-BLS	630	300	25
HM-250x300-25-BLS	250	300	25
HM-400x300-25-BLS	400	300	25
HM-500x300-25-BLS	500	300	25
HM-630x300-25-BLS	630	300	25

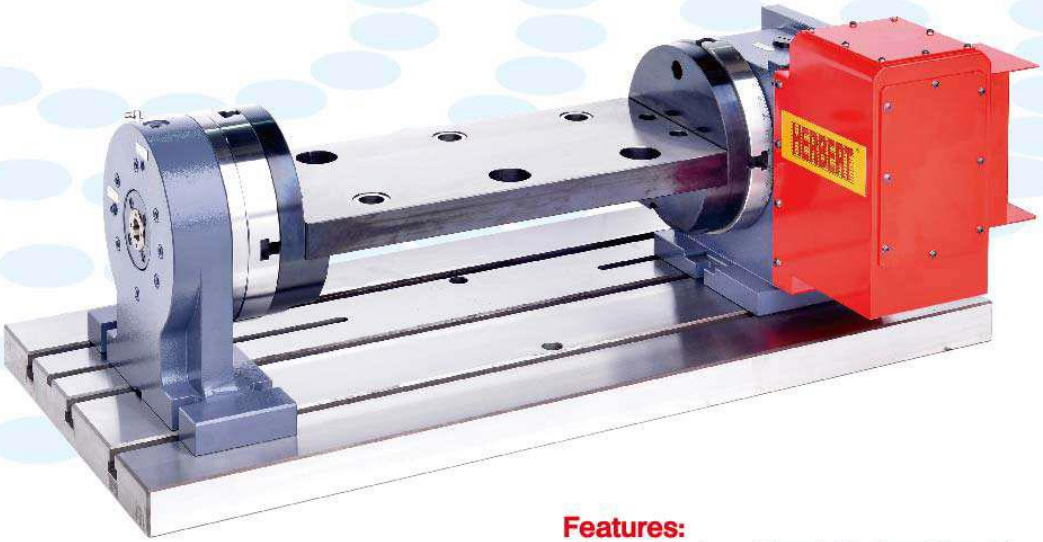

Features:

This positioning unit is suitable for quick mold or fixture exchange on CNC horizontal or vertical machines. (Shortening loading time)
Repeatability can be retained within ±0.01mm.
Positioning and locking in an action.